2016 Ninja ZX-10R ABS KRT Edition

PARTS DIAGRAM

Side Covers/Chain Cover

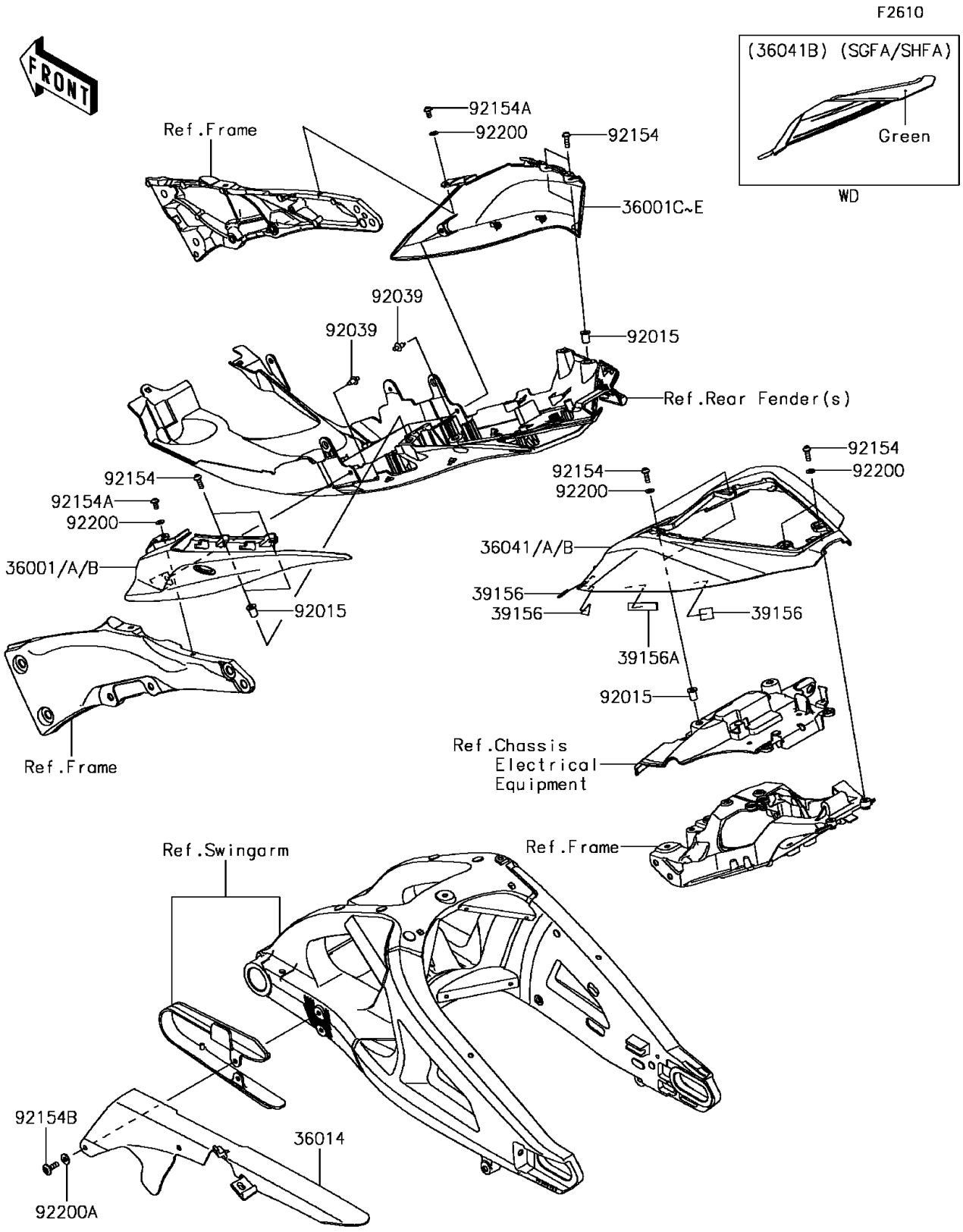

© 2026 Kawasaki Motors Corp., U.S.A.

2016 Ninja ZX-10R ABS KRT Edition

Kawasaki
Let the Good Times Roll®

PARTS LIST

Side Covers/Chain Cover

ITEM NAME	PART NUMBER	QUANTITY
COVER-SIDE,TAIL,LH,L.GREEN (Ref # 36001B)	36001-0640-777	1
COVER-SIDE,TAIL,RH,L.GREEN (Ref # 36001E)	36001-0641-777	1
CASE-CHAIN (Ref # 36014)	36014-0062	1
COVER-TAIL,L.GREEN (Ref # 36041B)	36041-5113-777	1
PAD,15X20X0.2 (Ref # 39156)	39156-1784	6
PAD,10X50X2 (Ref # 39156A)	39156-1924	2
NUT,WELL,5MM (Ref # 92015)	92015-1757	6
RIVET (Ref # 92039)	92039-0068	2
BOLT,SOCKET,5X16 (Ref # 92154)	92154-0209	8
BOLT,SOCKET,5X10 (Ref # 92154A)	92154-0211	2
BOLT,SOCKET,6X18 (Ref # 92154B)	92154-1694	1
WASHER,NYLONE,5.3X11.5X0.5 (Ref # 92200)	92200-0006	6
WASHER,6.2X15X1.2 (Ref # 92200A)	92200-1762	1

© 2026 Kawasaki Motors Corp., U.S.A.