2016 Ninja ZX-10R ABS

PARTS DIAGRAM

Rear Wheel/Chain

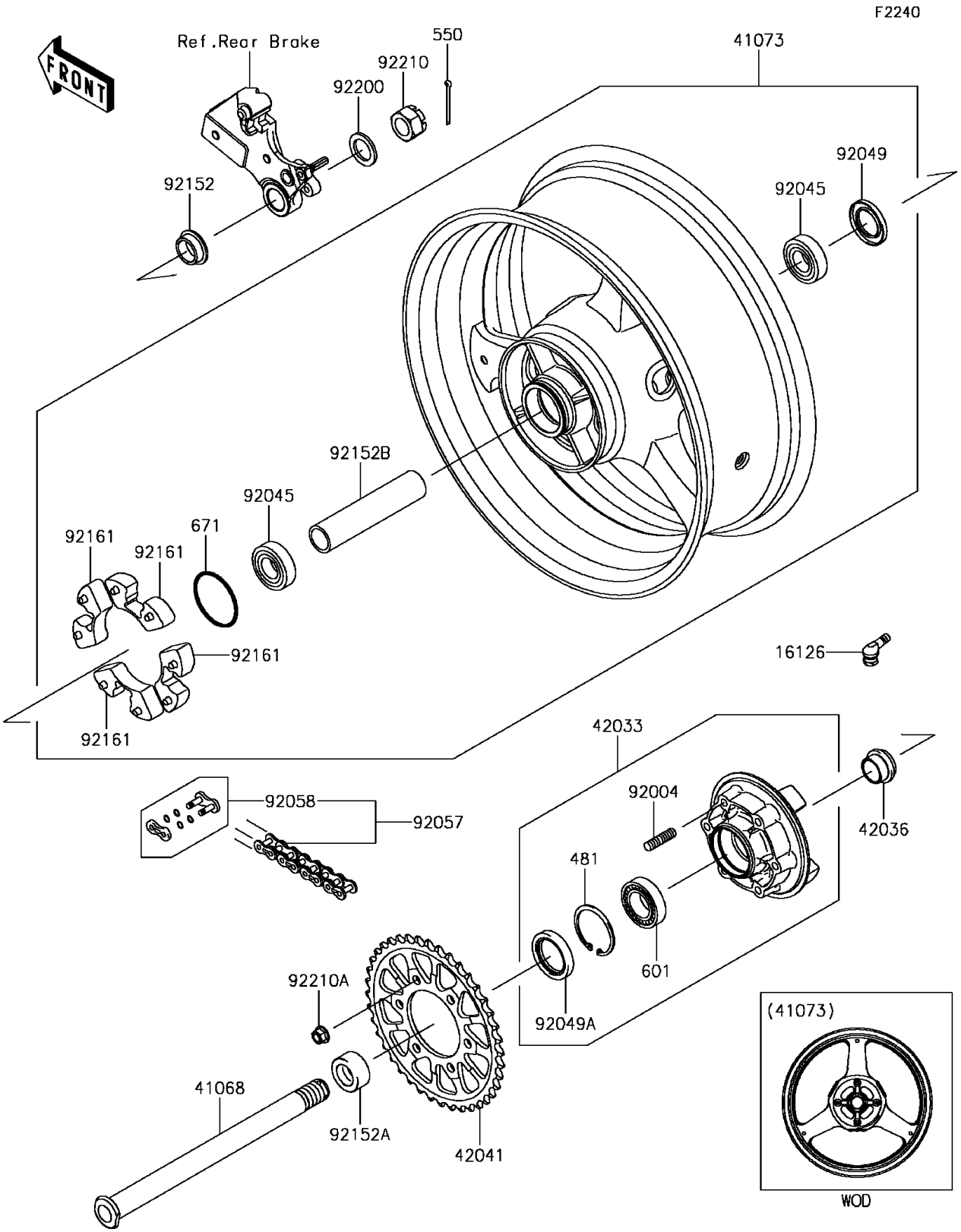

© 2026 Kawasaki Motors Corp., U.S.A.

2016 Ninja ZX-10R ABS

PARTS LIST

Rear Wheel/Chain

ITEM NAME	PART NUMBER	QUANTITY

© 2026 Kawasaki Motors Corp., U.S.A.