2016 Ninja ZX-10R ABS

PARTS DIAGRAM

Front Wheel

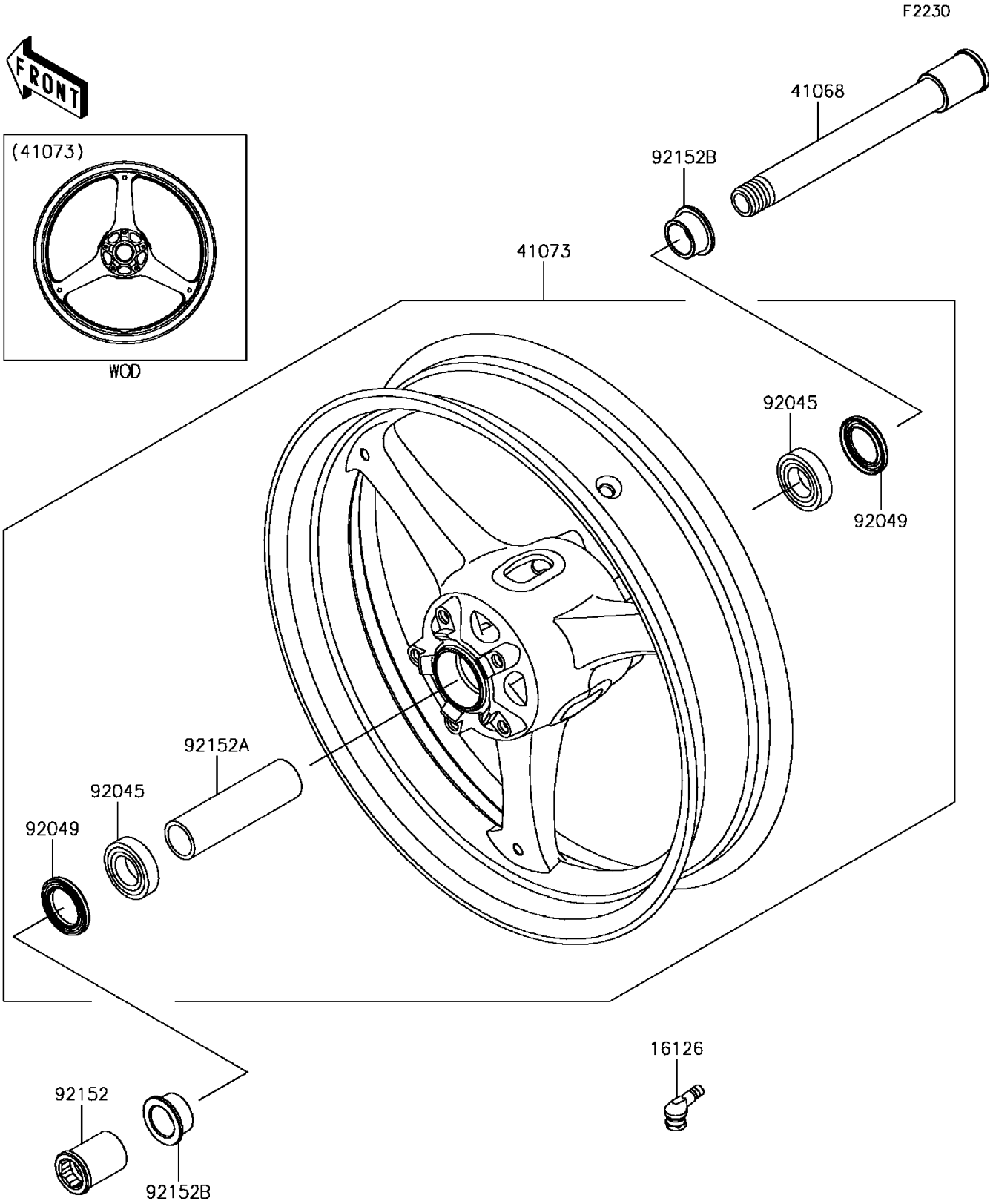

© 2026 Kawasaki Motors Corp., U.S.A.

2016 Ninja ZX-10R ABS

PARTS LIST

Front Wheel

ITEM NAME	PART NUMBER	QUANTITY
VALVE (Ref # 16126)	16126-0735	1
AXLE,FR,25X205 (Ref # 41068)	41068-0594	1
WHEEL-ASSY,FR,G.BLACK (Ref # 41073)	41073-0677-18F	1
BEARING-BALL,25X47X12 (Ref # 92045)	92045-0803	2
SEAL-OIL,BJN-C2 32X47X5 (Ref # 92049)	92049-0050	2
COLLAR,FR AXLE,LH,L=44.5 (Ref # 92152)	92152-0240	1
COLLAR,FR HUB,L=115 (Ref # 92152A)	92152-0616	1
COLLAR,25X40X18 (Ref # 92152B)	92152-1947	2

© 2026 Kawasaki Motors Corp., U.S.A.