2016 Ninja ZX-10R ABS KRT Edition

PARTS DIAGRAM

Generator

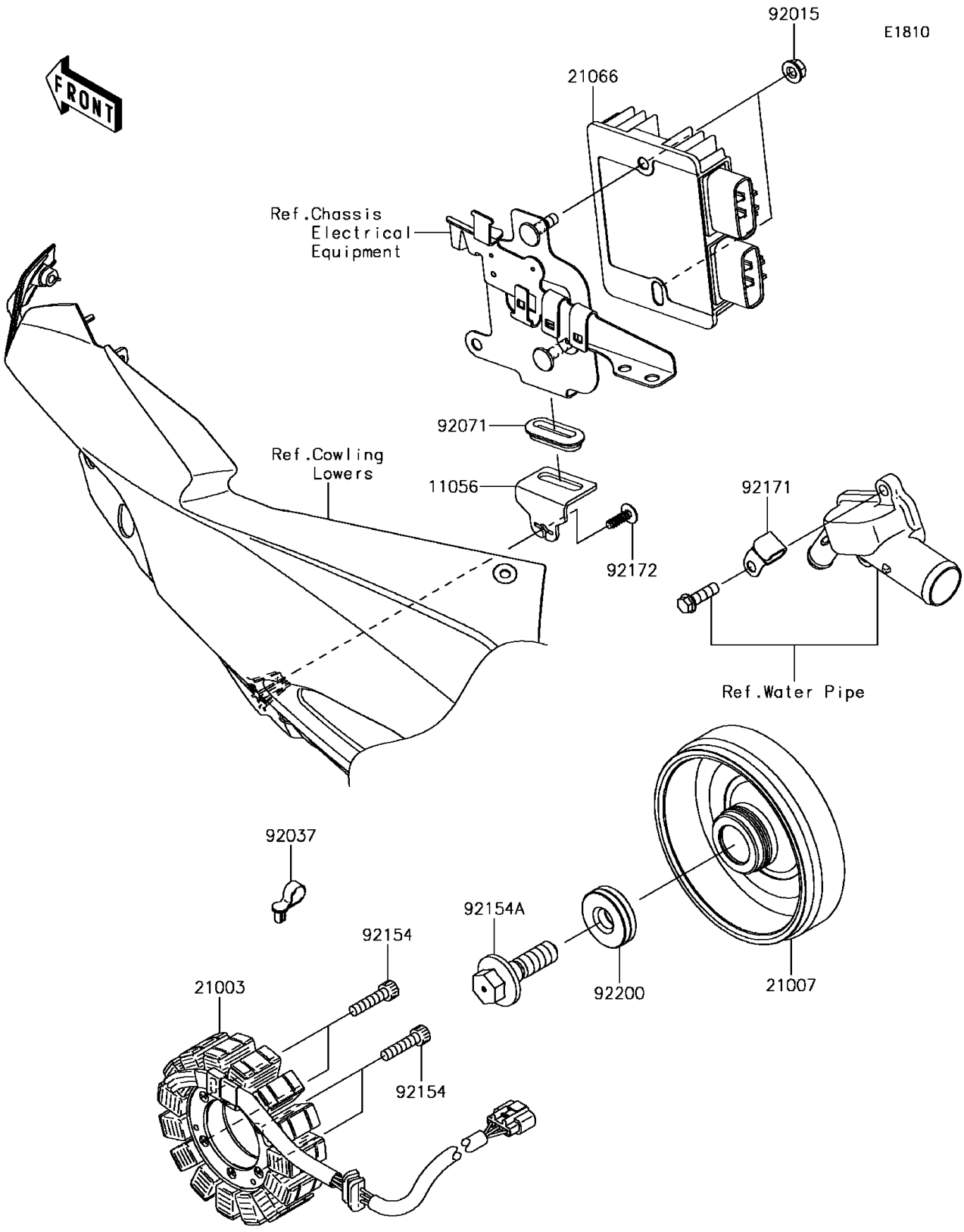

© 2026 Kawasaki Motors Corp., U.S.A.

2016 Ninja ZX-10R ABS KRT Edition

Kawasaki
Let the Good Times Roll®

PARTS LIST

Generator

ITEM NAME	PART NUMBER	QUANTITY
BRACKET,REGULATOR (Ref # 11056)	11056-7812	1
STATOR (Ref # 21003)	21003-0107	1
ROTOR (Ref # 21007)	21007-0591	1
REGULATOR-VOLTAGE (Ref # 21066)	21066-0748	1
NUT,FLANGED,6MM (Ref # 92015)	92015-1367	2
CLAMP,SPEED,L=43 (Ref # 92037)	92037-1290	1
GROMMET (Ref # 92071)	92071-1187	1
BOLT,SOCKET,6X25 (Ref # 92154)	92154-0477	4
BOLT,12X40 (Ref # 92154A)	92154-1944	1
CLAMP (Ref # 92171)	92171-0534	1
SCREW,TAPPING,5X16 (Ref # 92172)	92172-0175	1
WASHER,12X34X9 (Ref # 92200)	92200-0369	1

© 2026 Kawasaki Motors Corp., U.S.A.