# 2017 Ninja ZX-10R KRT Edition

## PARTS DIAGRAM

### Engine Mount

F2122

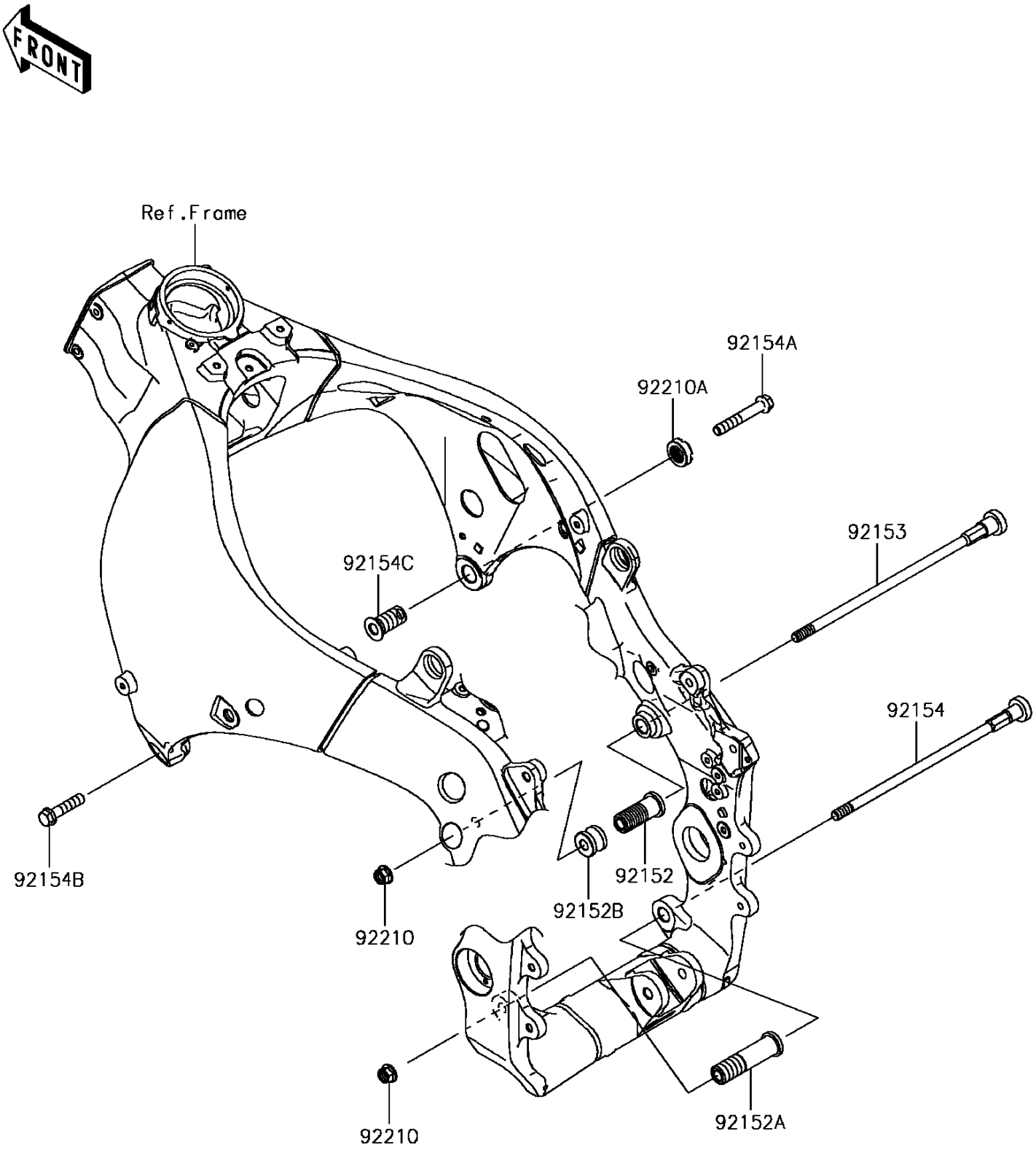


© 2026 Kawasaki Motors Corp., U.S.A.

# 2017 Ninja ZX-10R KRT Edition

## PARTS LIST

### Engine Mount

| ITEM NAME | PART NUMBER | QUANTITY |
|---|---|---|
| COLLAR,ENGINE MOUNT (Ref # 92152) | 92152-0076 | 1 |
| COLLAR,10.5X20X80 (Ref # 92152A) | 92152-0860 | 1 |
| COLLAR (Ref # 92152B) | 92152-0984 | 1 |
| BOLT,SOCKET,10X279 (Ref # 92153) | 92153-1329 | 1 |
| BOLT,SOCKET,10X260 (Ref # 92154) | 92154-0386 | 1 |
| BOLT,FLANGED,10X65 (Ref # 92154A) | 92154-1964 | 1 |
| BOLT,FLANGED,10X40 (Ref # 92154B) | 92154-1965 | 1 |
| BOLT,SOCKET,18X38 (Ref # 92154C) | 92154-1966 | 1 |
| NUT,LOCK,FLANGED,10MM (Ref # 92210) | 92210-1139 | 2 |
| NUT,CASTLE,18MM (Ref # 92210A) | 92210-1390 | 1 |

© 2026 Kawasaki Motors Corp., U.S.A.