2017 Ninja ZX-10R KRT Edition

PARTS DIAGRAM

Crankcase Bolt Pattern

E1412

(Upper Case)

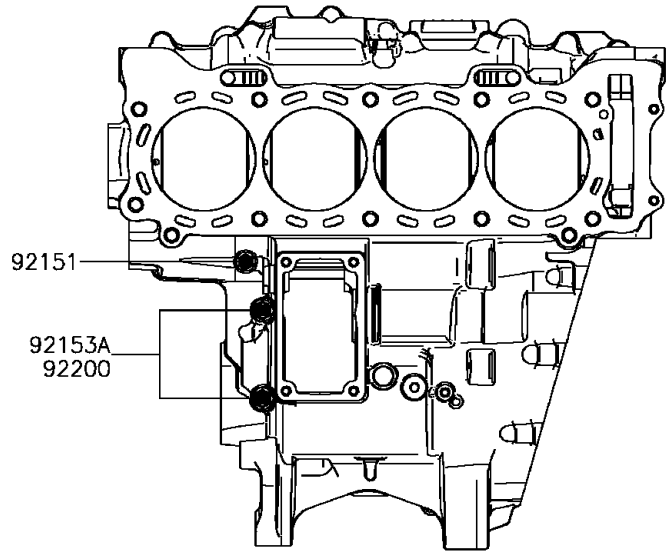

(Lower Case)

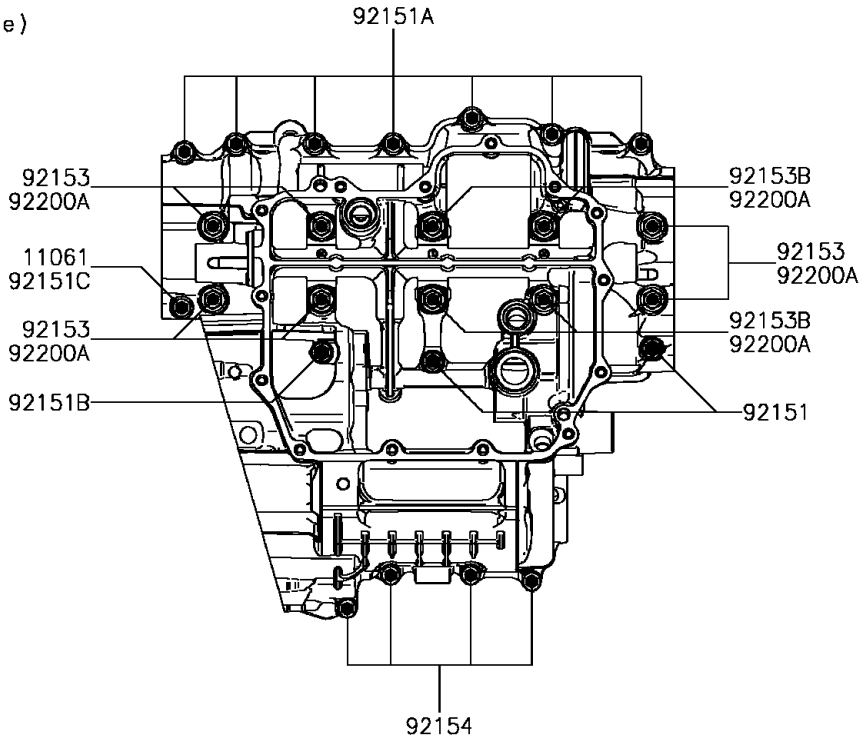

© 2026 Kawasaki Motors Corp., U.S.A.

2017 Ninja ZX-10R KRT Edition

PARTS LIST

Crankcase Bolt Pattern

ITEM NAME	PART NUMBER	QUANTITY
GASKET,6.2X13.5X1.0 (Ref # 11061)	11061-0262	1
BOLT,FLANGED,7X50 (Ref # 92151)	92151-1223	3
BOLT,FLANGED,6X45 (Ref # 92151A)	92151-1521	7
BOLT,FLANGED,7X45 (Ref # 92151B)	92151-1539	1
BOLT,6X60 (Ref # 92151C)	92151-1791	1
BOLT,FLANGED,9X100 (Ref # 92153)	92153-0447	6
BOLT,8X63 (Ref # 92153A)	92153-1110	2
BOLT,FLANGED,9X113 (Ref # 92153B)	92153-1449	4
BOLT,FLANGED,6X40 (Ref # 92154)	92154-0861	4
WASHER,8.2X16X1.6 (Ref # 92200)	92200-0047	2
WASHER,9.2X19X2.3 (Ref # 92200A)	92200-0115	10

© 2026 Kawasaki Motors Corp., U.S.A.