1999 Lakota 300

PARTS DIAGRAM

Oil Pump/Oil Filter

E1710

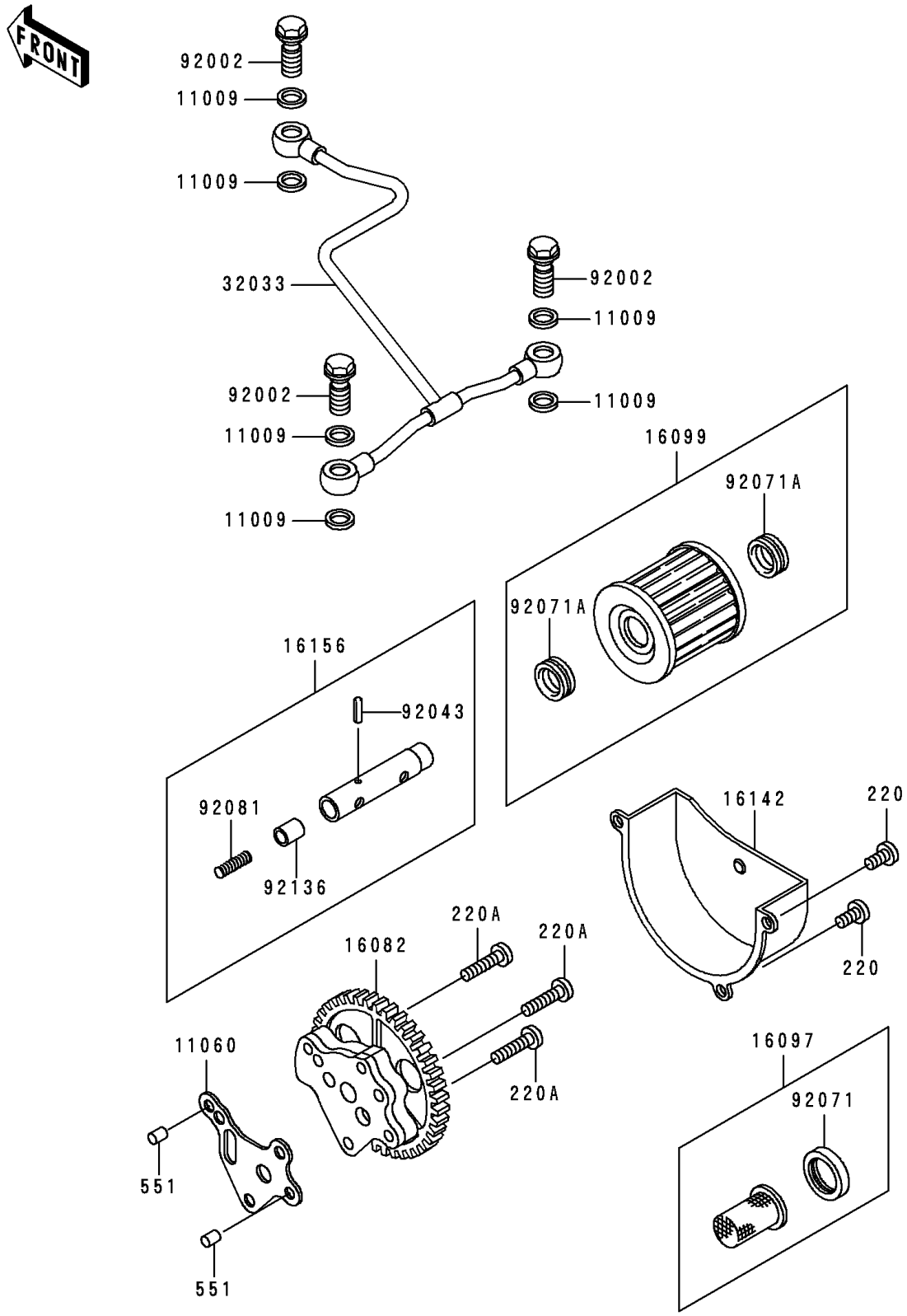

© 2026 Kawasaki Motors Corp., U.S.A.

1999 Lakota 300

PARTS LIST

Oil Pump/Oil Filter

ITEM NAME	PART NUMBER	QUANTITY
SCREW-PAN-CROS,6X12 (Ref # 220)	220B0612	3
SCREW-PAN-CROS,6X25 (Ref # 220A)	220B0625	3
PIN-DOWEL,6X8 (Ref # 551)	551A0608	2
GASKET,10X14.5X1.5 (Ref # 11009)	11009-1105	6
GASKET,OIL PUMP (Ref # 11060)	11060-1657	1
PUMP-ASSY-OIL (Ref # 16082)	16082-1068	1
FILTER-ASSY-OIL (Ref # 16097)	16097-1001	1
ELEMENT-OIL FILTER (Ref # 16099)	16099-004	1
COVER-PUMP (Ref # 16142)	16142-1064	1
PISTON-ASSY,VALVE,BY-PASS (Ref # 16156)	16156-002	1
PIPE,OIL (Ref # 32033)	32033-1744	1
BOLT,OIL,L=23 (Ref # 92002)	92002-1888	3
PIN,SPRING,2.2X13.5 (Ref # 92043)	92043-123	1
GROMMET,OIL STRAINER (Ref # 92071)	92071-100	1
GROMMET,OIL FILTER (Ref # 92071A)	92071-101	2
SPRING,PISTON (Ref # 92081)	92081-043	1
VALVE (Ref # 92136)	92136-002	1

© 2026 Kawasaki Motors Corp., U.S.A.