1987 KE100

PARTS DIAGRAM

Label

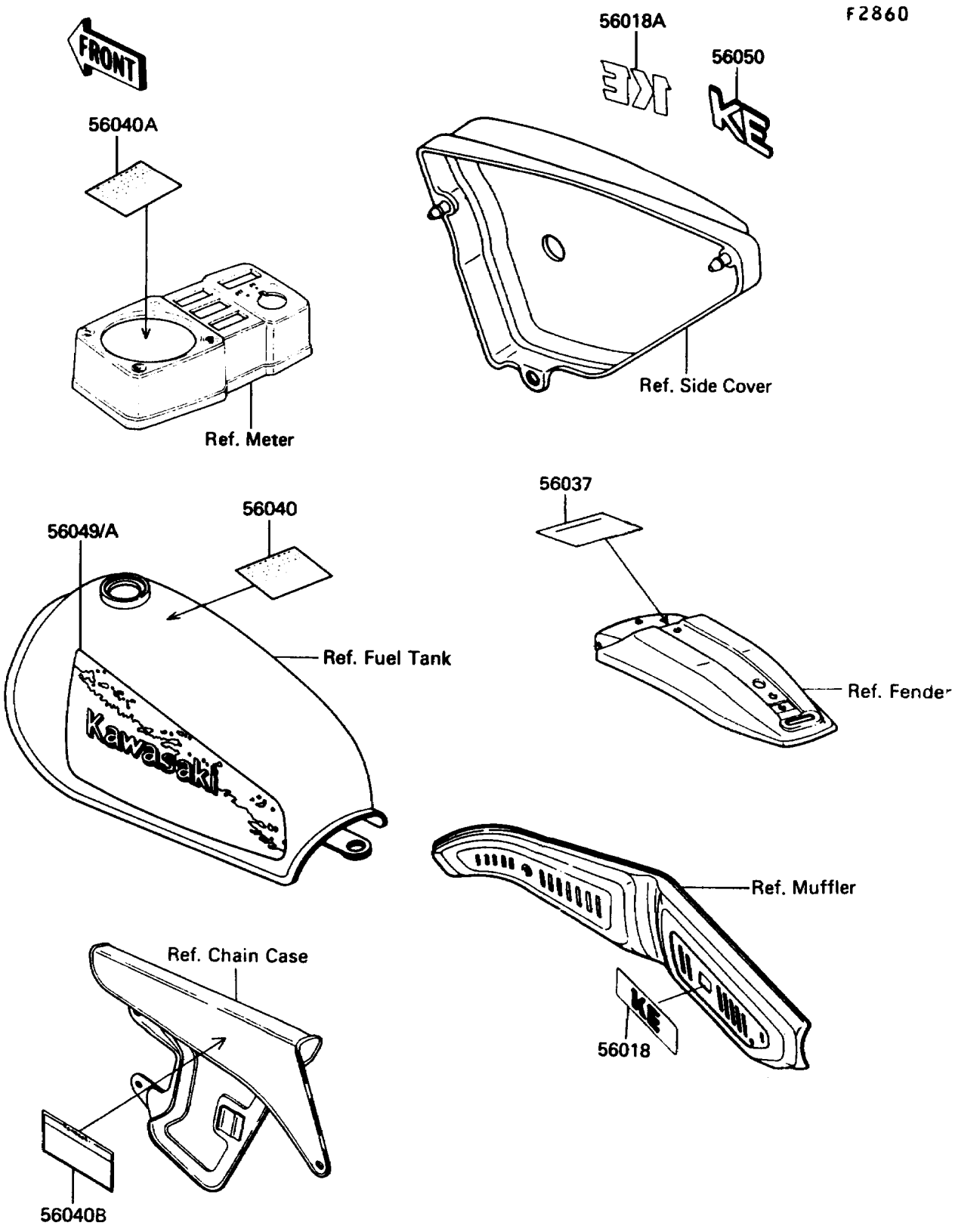

© 2026 Kawasaki Motors Corp., U.S.A.

1987 KE100

PARTS LIST

Label

ITEM NAME	PART NUMBER	QUANTITY
MARK,MUFFLER COVER (Ref # 56018)	56018-1322	1
MARK,SIDE COVER,KE,FOR WHITE (Ref # 56018A)	56018-1903	1
LABEL-SPECIFICATION,TIRE&LOAD (Ref # 56037)	56037-1154	1
LABEL-WARNING,BREAK IN CAUTION (Ref # 56040)	56040-1008	1
LABEL-WARNING,BREAK IN CAUTION (Ref # 56040A)	56040-1010	1
LABEL-WARNING,SIDE STAND (Ref # 56040B)	56040-1012	1

© 2026 Kawasaki Motors Corp., U.S.A.