1987 KE100

PARTS DIAGRAM

Tail Lamp

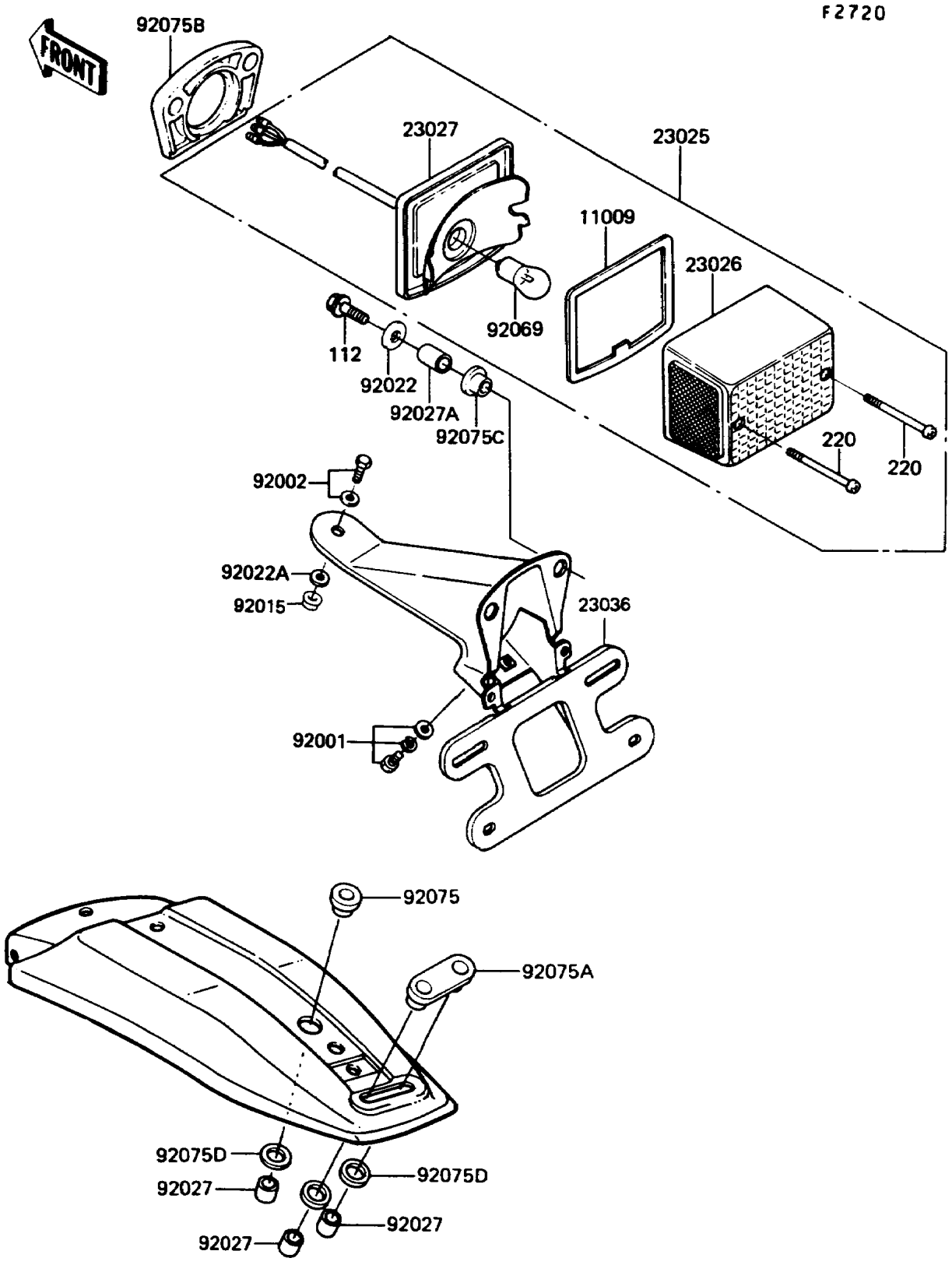

© 2026 Kawasaki Motors Corp., U.S.A.

1987 KE100

PARTS LIST

Tail Lamp

ITEM NAME	PART NUMBER	QUANTITY
GASKET,TAIL LAMP LENS (Ref # 11009)	11009-1078	1
LAMP-TAIL (Ref # 23025)	23025-1032	1
LENS,TAIL LAMP (Ref # 23026)	23026-1003	1
BODY-COMP-TAIL LAMP (Ref # 23027)	23027-1020	1
BRACKET-TAIL LAMP (Ref # 23036)	23036-1010	1
BOLT (Ref # 92001)	92001-1768	2
BOLT,6X28 (Ref # 92002)	92002-1125	1
NUT,FLANGED,6MM (Ref # 92015)	92015-1367	1
WASHER,6.5X20X1.6 (Ref # 92022)	92022-125	2
WASHER,6.5X20X1.6 (Ref # 92022A)	92022-1557	1
COLLAR,6.8X10X14.5 (Ref # 92027)	92027-156	3
COLLAR,6.1X8X15.7 (Ref # 92027A)	92027-1819	2
BULB,6V 32/3CP (Ref # 92069)	92069-074	1
DAMPER,TAIL LAMP (Ref # 92075)	92075-1004	1
DAMPER,TAIL LAMP (Ref # 92075A)	92075-1005	1
DAMPER,TAIL LAMP (Ref # 92075B)	92075-1094	1
DAMPER (Ref # 92075C)	92075-1095	2
DAMPER,RUBBER (Ref # 92075D)	92075-310	3
BOLT-UPSET,6X25 (Ref # 112)	112B0625	2
SCREW-PAN-CROS (Ref # 220)	220B0440	2

© 2026 Kawasaki Motors Corp., U.S.A.