# 1987 KE100

## PARTS DIAGRAM

### Brake Pedal

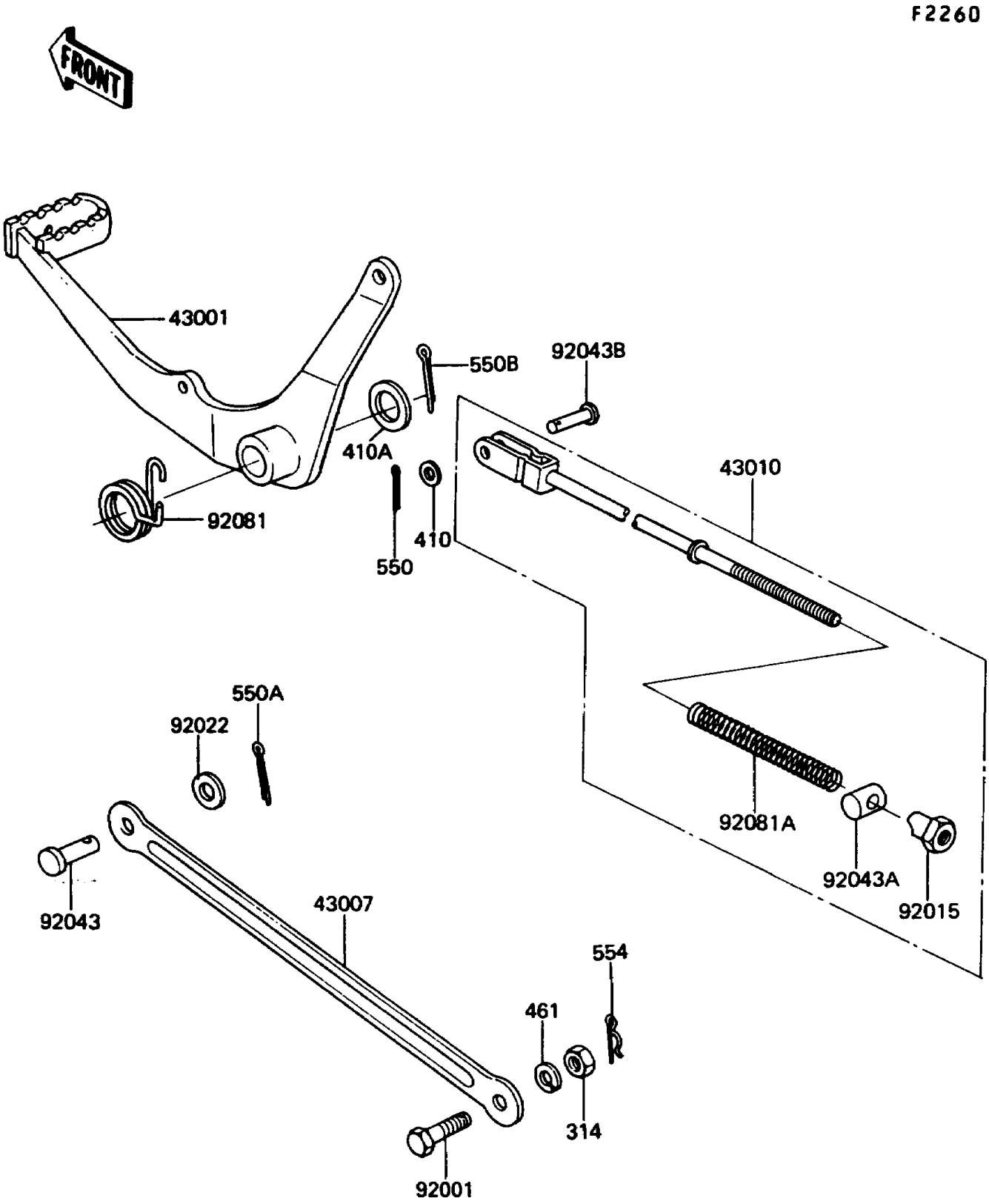


© 2026 Kawasaki Motors Corp., U.S.A.

# 1987 KE100

## PARTS LIST

### Brake Pedal

| ITEM NAME | PART NUMBER | QUANTITY |
|---|---|---|
| LEVER-BRAKE,PEDAL (Ref # 43001) | 43001-056 | 1 |
| ROD-TORQUE,RR (Ref # 43007) | 43007-028 | 1 |
| ROD-ASSY-BRAKE (Ref # 43010) | 43010-5001 | 1 |
| BOLT,10X32 (Ref # 92001) | 92001-1671 | 1 |
| NUT,BRAKE ROD (Ref # 92015) | 92015-042 | 1 |
| WASHER,10.5X18X1.6 (Ref # 92022) | 92022-1539 | 1 |
| PIN,SPRING,10X12 (Ref # 92043) | 43009-001 | 1 |
| PIN,BRAKE ROD (Ref # 92043A) | 92043-039 | 1 |
| PIN,6X17 (Ref # 92043B) | 92043-064 | 1 |
| SPRING,BRAKE PEDAL (Ref # 92081) | 43005-007 | 1 |
| SPRING,BRAKE ROD (Ref # 92081A) | 43012-001 | 1 |
| NUT-HEX-FINE,10MM,BLACK (Ref # 314) | 314C1000 | 1 |
| WASHER-PLAIN-SMALL,6MM (Ref # 410) | 410B0600 | 1 |
| WASHER-PLAIN-SMALL,14MM,BLACK (Ref # 410A) | 410F1400 | 1 |
| WASHER-SPRING,10MM,BLACK (Ref # 461) | 461K1000 | 1 |
| PIN-COTTER,2.0X15 (Ref # 550) | 550D2015 | 1 |
| PIN-COTTER,2.5X15 (Ref # 550A) | 550D2515 | 1 |
| PIN-COTTER,3.0X30 (Ref # 550B) | 550D3030 | 1 |
| PIN-SNAP,8MM (Ref # 554) | 554A0800 | 1 |

© 2026 Kawasaki Motors Corp., U.S.A.