1987 KE100

PARTS DIAGRAM

Rear Hub

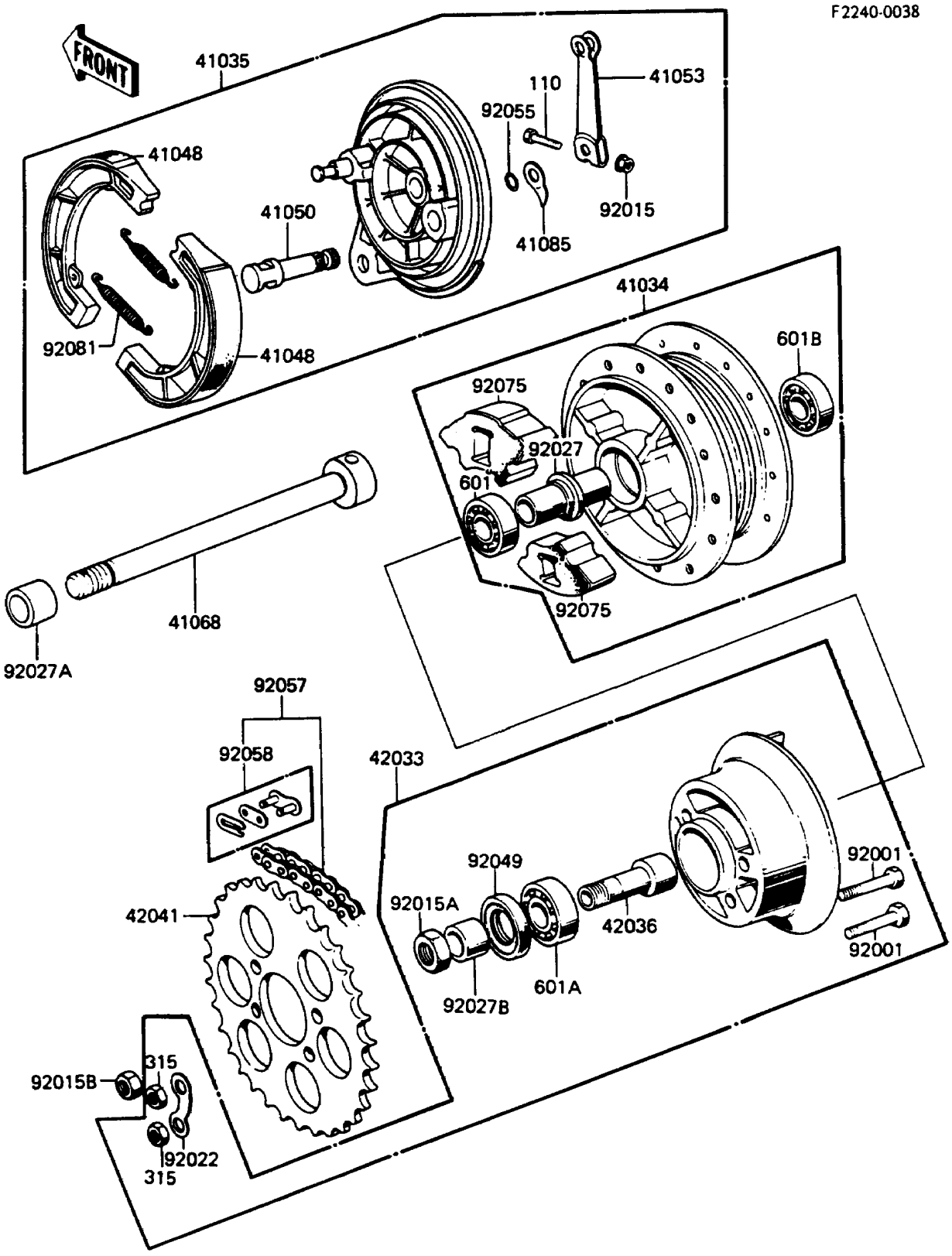

© 2026 Kawasaki Motors Corp., U.S.A.

1987 KE100

PARTS LIST

Rear Hub

ITEM NAME	PART NUMBER	QUANTITY
DRUM-ASSY,RR (Ref # 41034)	41034-1048	1
PANEL-ASSY-BRAKE,RR (Ref # 41035)	41035-1081	1
SHOE-BRAKE (Ref # 41048)	41048-017	2
CAM-BRAKE (Ref # 41050)	42026-018	1
LEVER-BRAKE CAM (Ref # 41053)	42029-020	1
AXLE,RR (Ref # 41068)	41068-1229	1
INDICATOR,BRAKE SHOE (Ref # 41085)	41085-003	1
COUPLING-ASSY (Ref # 42033)	42033-1042	1
SLEEVE,RR HUB COUPLING (Ref # 42036)	42036-013	1
SPROCKET-HUB,40T (Ref # 42041)	42041-1095	1
BOLT,HUB SPROCKET,10X36 (Ref # 92001)	92001-082	4
NUT,6MM (Ref # 92015)	41072-007	1
NUT,16MM (Ref # 92015A)	42045-004	1
NUT,10MM (Ref # 92015B)	42045-005	1
WASHER,LOCK (Ref # 92022)	92088-011	2
COLLAR,L=58 (Ref # 92027)	42010-005	1
COLLAR,12.2X22X28.5 (Ref # 92027A)	42032-006	1
COLLAR,17X25X12.5 (Ref # 92027B)	42037-003	1
SEAL-OIL,COUPLING (Ref # 92049)	92052-003	1
RING-O,BRAKE CAM (Ref # 92055)	92055-004	1
CHAIN,DRIVE,EK428-G 112L (Ref # 92057)	92057-1099	1
JOINT-CHAIN,EK428-G (Ref # 92058)	92058-1014	1
DAMPER,RR HUB SHOCK (Ref # 92075)	42014-016	4
SPRING,BRAKE SHOE (Ref # 92081)	92081-1766	2
BOLT,6X30 (Ref # 110)	110G0630	1
NUT-HEX-FINE,10MM (Ref # 315)	315B1000	4
BEARING-BALL,#6201G (Ref # 601)	601B6201G	1
BEARING-BALL,#6203G (Ref # 601A)	601B6203G	1
BEARING-BALL,#6301ZG (Ref # 601B)	601B6301ZG	1

© 2026 Kawasaki Motors Corp., U.S.A.