1989 KE100

PARTS DIAGRAM

Fender

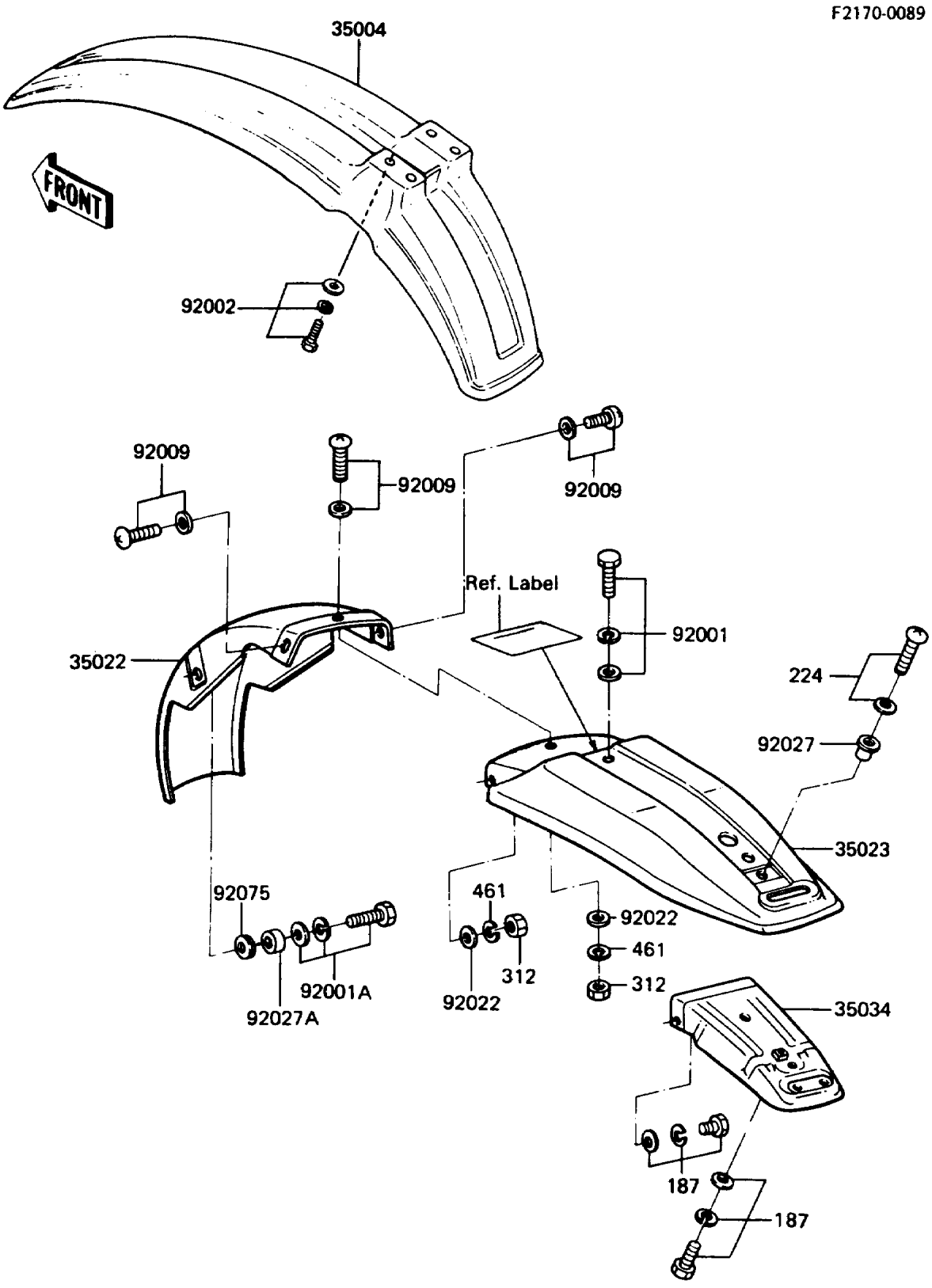

© 2026 Kawasaki Motors Corp., U.S.A.

1989 KE100

PARTS LIST

Fender

ITEM NAME	PART NUMBER	QUANTITY
FENDER-FRONT,P.WHITE (Ref # 35004)	35004-1072-6F	1
FENDER-COMP-REAR,FR (Ref # 35022)	35022-064	1
FENDER-REAR,RR,P.WHITE (Ref # 35023)	35023-1039-6F	1
REINFORCE (Ref # 35034)	35034-1075	1
BOLT,6X12 (Ref # 92001)	92001-1761	1
BOLT,W/SP,6X16 (Ref # 92001A)	92001-1763	2
BOLT,6X16 (Ref # 92002)	92002-1075	4
SCREW,6X14 (Ref # 92009)	92009-1281	3
WASHER,6.5X20X1.6 (Ref # 92022)	92022-125	3
COLLAR,L=3.5 (Ref # 92027)	92027-1018	1
COLLAR,6.8X10X6 (Ref # 92027A)	92027-103	2
DAMPER (Ref # 92075)	92075-105	2
BOLT-UPSET-WSP (Ref # 187)	187B0612	3
SCREW-PAN-WP-CROS (Ref # 224)	224B0614	1
NUT-HEX,6MM (Ref # 312)	312B0600	3
WASHER-SPRING,6MM (Ref # 461)	461F0600	3

© 2026 Kawasaki Motors Corp., U.S.A.