# 2010 Ninja® 250R

## PARTS DIAGRAM

### Front Brake

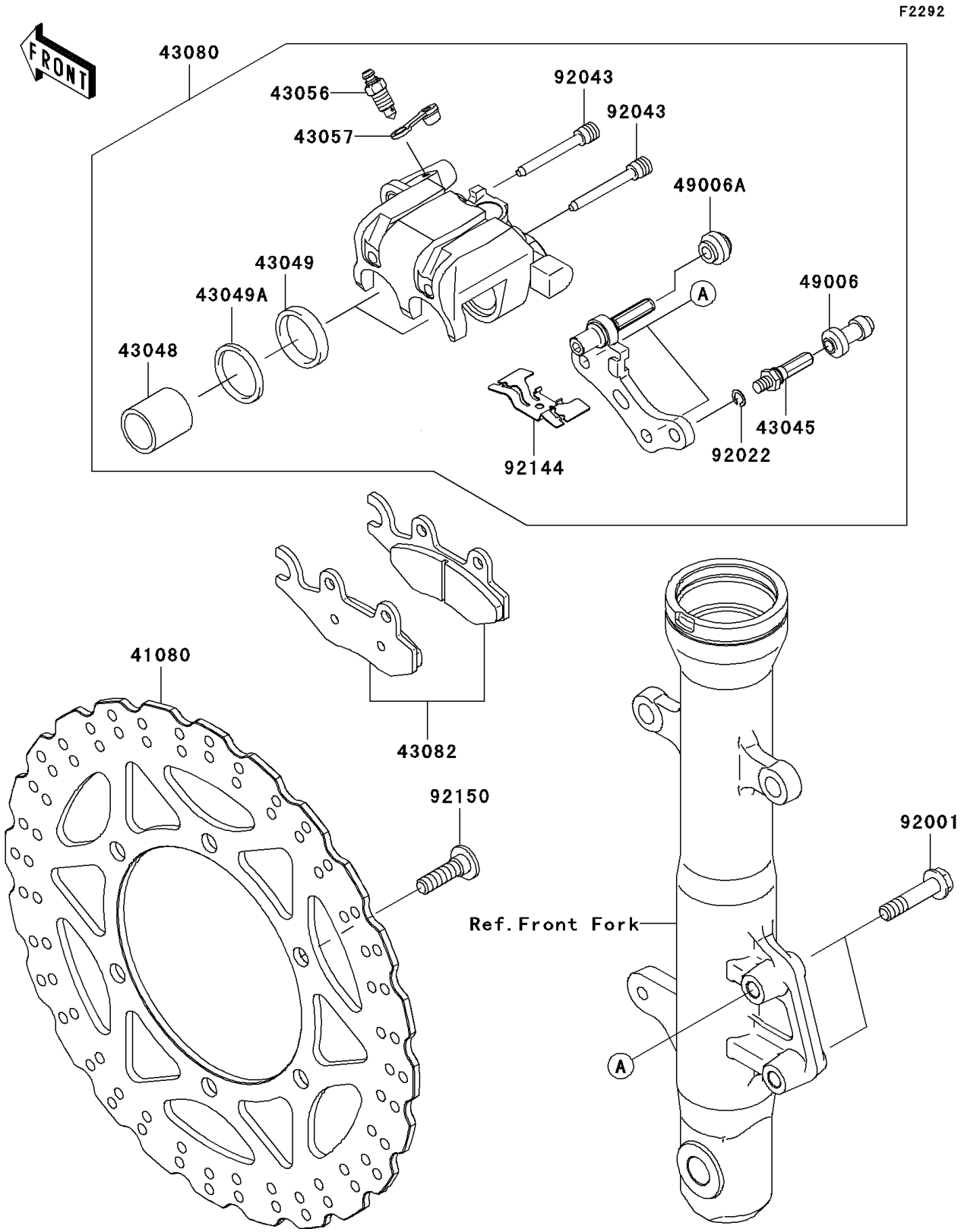


© 2026 Kawasaki Motors Corp., U.S.A.

# 2010 Ninja® 250R

## PARTS LIST

### Front Brake

| ITEM NAME | PART NUMBER | QUANTITY |
|---|---|---|
| DISC,FR,BLACK (Ref # 41080) | 41080-0113-11H | 1 |
| SHAFT-CALIPER (Ref # 43045) | 43045-1010 | 1 |
| PISTON-CALIPER (Ref # 43048) | 43048-1068 | 2 |
| PACKING,PISTON SEAL (Ref # 43049) | 43049-1060 | 2 |
| PACKING,PISTON SEAL (Ref # 43049A) | 43049-1061 | 2 |
| BREATHER-BRAKE (Ref # 43056) | 43056-0004 | 1 |
| CAP-BREATHER (Ref # 43057) | 43057-1001 | 1 |
| CALIPER-SUB-ASSY,FR,RH,SILVER (Ref # 43080) | 43080-0062-GN | 1 |
| PAD-ASSY-BRAKE (Ref # 43082) | 43082-0081 | 1 |
| BOOT,CALIPER (Ref # 49006) | 49006-1088 | 1 |
| BOOT,CALIPER (Ref # 49006A) | 49006-1242 | 1 |
| BOLT,FLANGED,8X36 (Ref # 92001) | 92001-1041 | 2 |
| WASHER,WAVE (Ref # 92022) | 92022-1373 | 1 |
| PIN,HANGER (Ref # 92043) | 92043-1416 | 2 |
| SPRING,PAD (Ref # 92144) | 92144-1847 | 1 |
| BOLT,SOCKET,8X30 (Ref # 92150) | 92150-1771 | 6 |

© 2026 Kawasaki Motors Corp., U.S.A.