# 1989 KE100

## PARTS DIAGRAM

Ignition Coil

E1830-0064




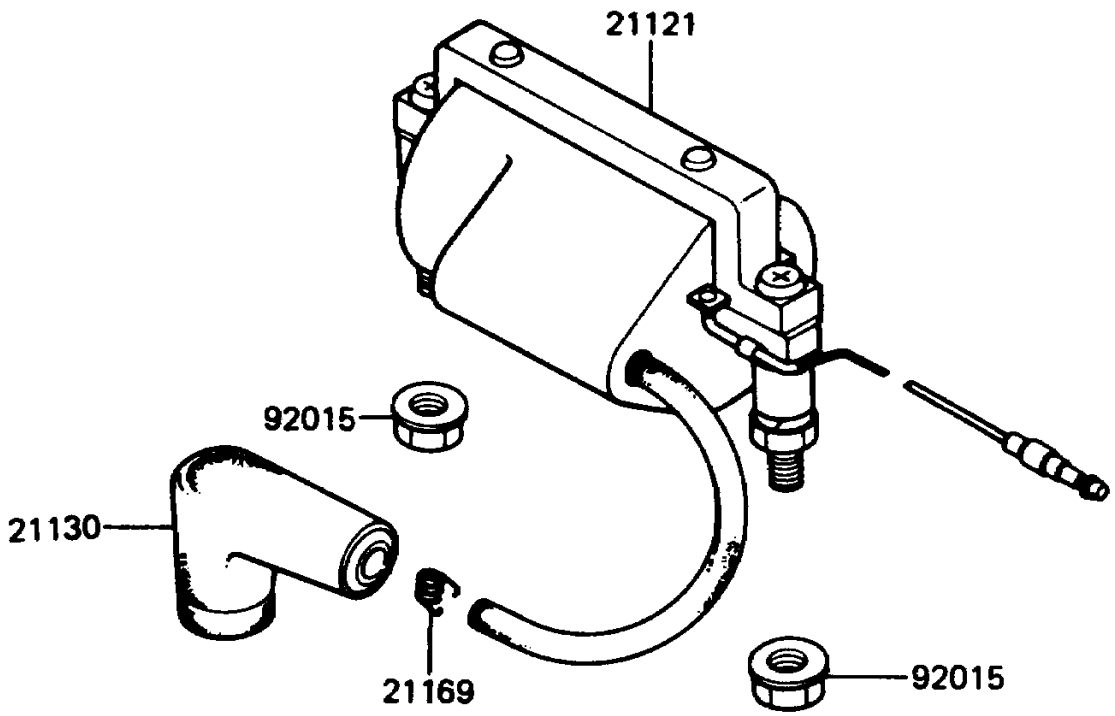


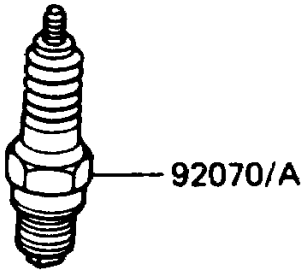


© 2026 Kawasaki Motors Corp., U.S.A.

# 1989 KE100

## PARTS LIST

### Ignition Coil

| ITEM NAME | PART NUMBER | QUANTITY |
|---|---|---|
| COIL-IGNITION (Ref # 21121) | 21129-008 | 1 |
| CAP-SPARK PLUG (Ref # 21130) | 21130-009 | 1 |
| TERMINAL,SPARK PLUG CAP (Ref # 21169) | 92101-001 | 1 |
| NUT,FLANGED,6MM (Ref # 92015) | 92015-1193 | 2 |
| PLUG-SPARK,B8ES(NGK) (Ref # 92070) | 92070-037 | 1 |
| PLUG-SPARK,B9ES(NGK) (Ref # 92070A) | 92070-054 | 1 |

© 2026 Kawasaki Motors Corp., U.S.A.