1989 KE100

PARTS DIAGRAM

Generator

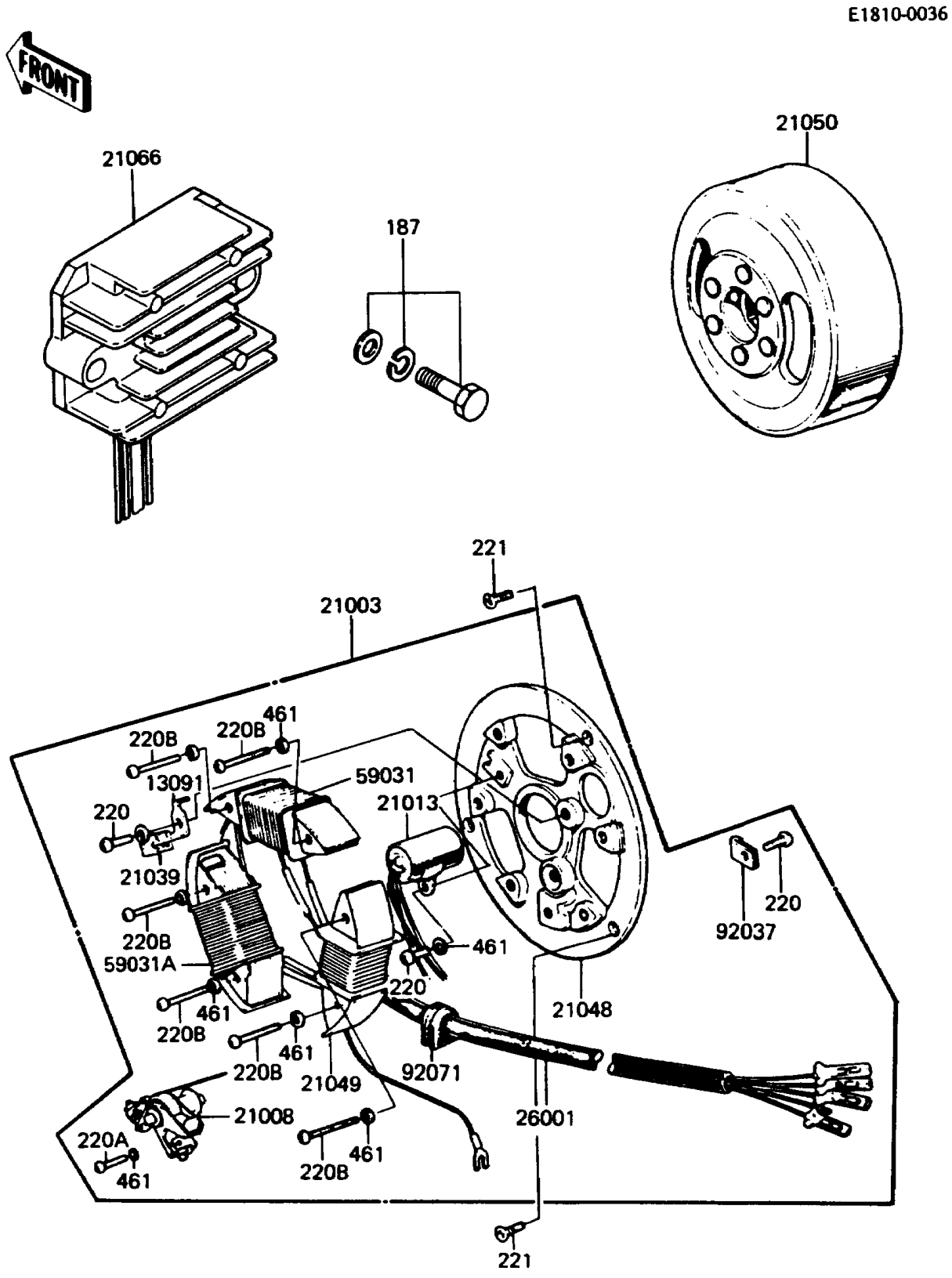

© 2026 Kawasaki Motors Corp., U.S.A.

1989 KE100

PARTS LIST

Generator

ITEM NAME	PART NUMBER	QUANTITY
HOLDER,OIL FELT (Ref # 13091)	21038-002	1
STATOR (Ref # 21003)	21003-1014	1
BREAKER,CONTACT (Ref # 21008)	21008-006	1
CONDENSER (Ref # 21013)	21013-006	1
BRUSH,OIL (Ref # 21039)	21019-005	1
PLATE-COIL,MAGNETO (Ref # 21048)	21048-007	1
COIL-EXCITING (Ref # 21049)	21049-1004	1
FLYWHEEL,MAGNETO (Ref # 21050)	21050-1009	1
REGULATOR-VOLTAGE (Ref # 21066)	21066-1012	1
HARNESS,MAGNETO (Ref # 26001)	26001-1077	1
COIL-CHARGING,A (Ref # 59031)	59031-1001	1
COIL-CHARGING,B (Ref # 59031A)	59031-1002	1
CLAMP,WIRING HARNESS (Ref # 92037)	21037-002	1
GROMMET (Ref # 92071)	21017-002	1
BOLT-UPSET-WSP (Ref # 187)	187B0625	1
SCREW-PAN-CROS,4X6 (Ref # 220)	220B0406	3
SCREW-PAN-CROS,4X12 (Ref # 220A)	220B0412	1
SCREW-PAN-CROS (Ref # 220B)	220E0430	6
SCREW-CSK-CROS,6X14 (Ref # 221)	221B0614	2
WASHER-SPRING,4MM (Ref # 461)	461F0400	9

© 2026 Kawasaki Motors Corp., U.S.A.