1989 KE100

PARTS DIAGRAM

Crankshaft/Piston

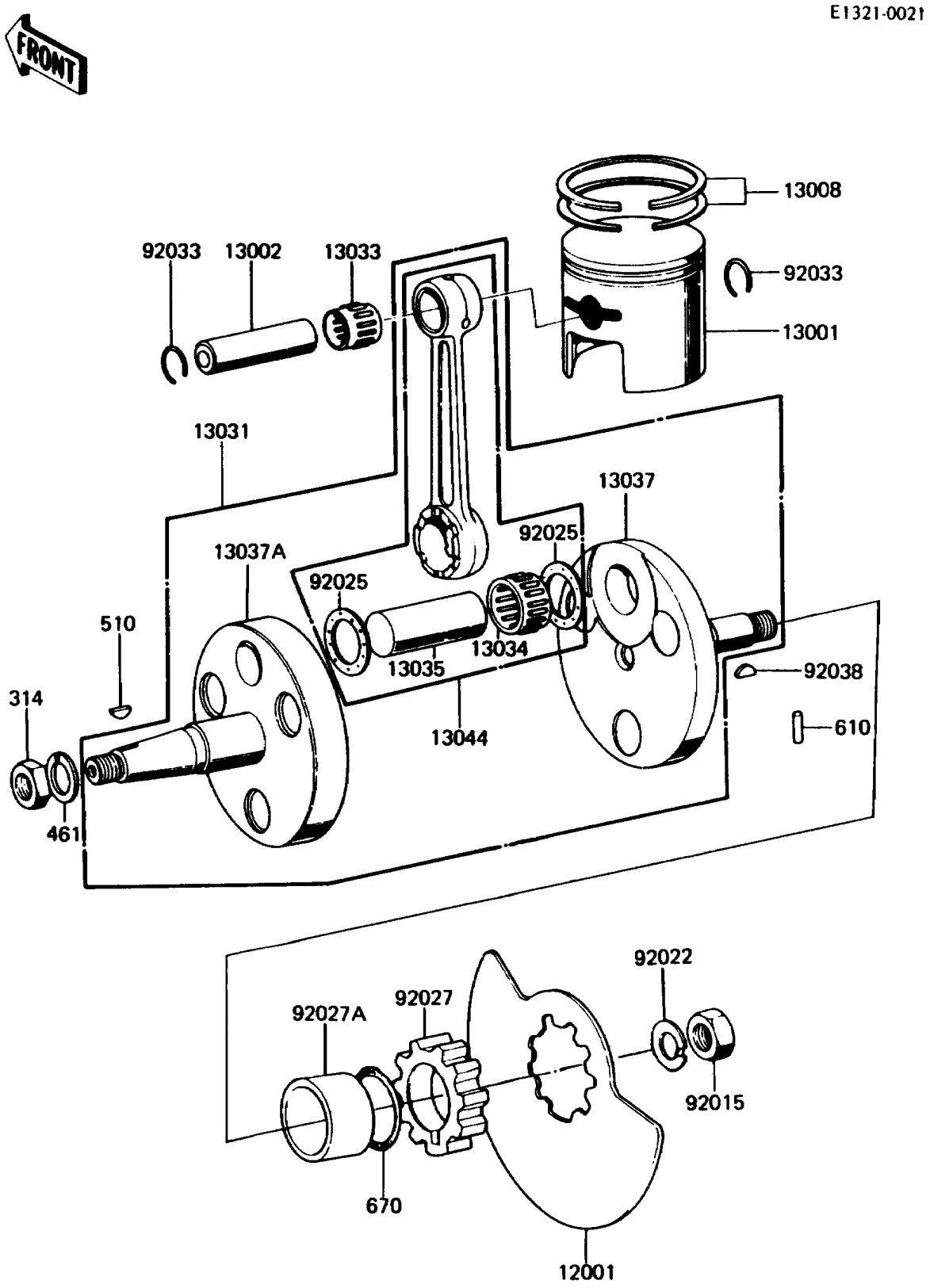

© 2026 Kawasaki Motors Corp., U.S.A.

1989 KE100

PARTS LIST

Crankshaft/Piston

ITEM NAME	PART NUMBER	QUANTITY
VALVE-ROTARY (Ref # 12001)	12002-030	1
PISTON-ENGINE,STD (Ref # 13001)	13001-057	1
PIN-PISTON (Ref # 13002)	13002-003	1
RING-SET-PISTON,STD (Ref # 13008)	13008-5009	1
CRANKSHAFT-COMP (Ref # 13031)	13036-043	1
BEARING-NEEDLE,KTV141817 (Ref # 13033)	13033-030	1
BEARING-NEEDLE,KT192814 (Ref # 13034)	13034-034	1
PIN-CRANK (Ref # 13035)	13035-025	1
CRANKSHAFT,RH (Ref # 13037)	13037-1135	1
CRANKSHAFT,LH (Ref # 13037A)	13037-1136	1
SET-CONNECTING ROD (Ref # 13044)	13044-5015	1
NUT,12MM (Ref # 92015)	92015-006	1
WASHER,CLAW,12.5X25X0.8 (Ref # 92022)	92024-003	1
SHIM,T=1.0 (Ref # 92025)	92025-047	2
COLLAR,ROTARY VALVE (Ref # 92027)	92027-1245	1
COLLAR,20X25X9.5 (Ref # 92027A)	92027-285	1
RING-SNAP,PISTON PIN (Ref # 92033)	92036-003	2
KEY,WOODRUFF (Ref # 92038)	92038-003	1
NUT-HEX-FINE,10MM (Ref # 314)	314B1000	1
WASHER-SPRING,10MM (Ref # 461)	461E1000	1
KEY-WOODRUFF (Ref # 510)	510A3200	1
ROLLER,4X10 (Ref # 610)	610A0410	1
O RING,16MM (Ref # 670)	670B2016	1

© 2026 Kawasaki Motors Corp., U.S.A.