2017 MULE PRO-FX™ EPS CAMO

PARTS DIAGRAM

Timing Belt

E1215

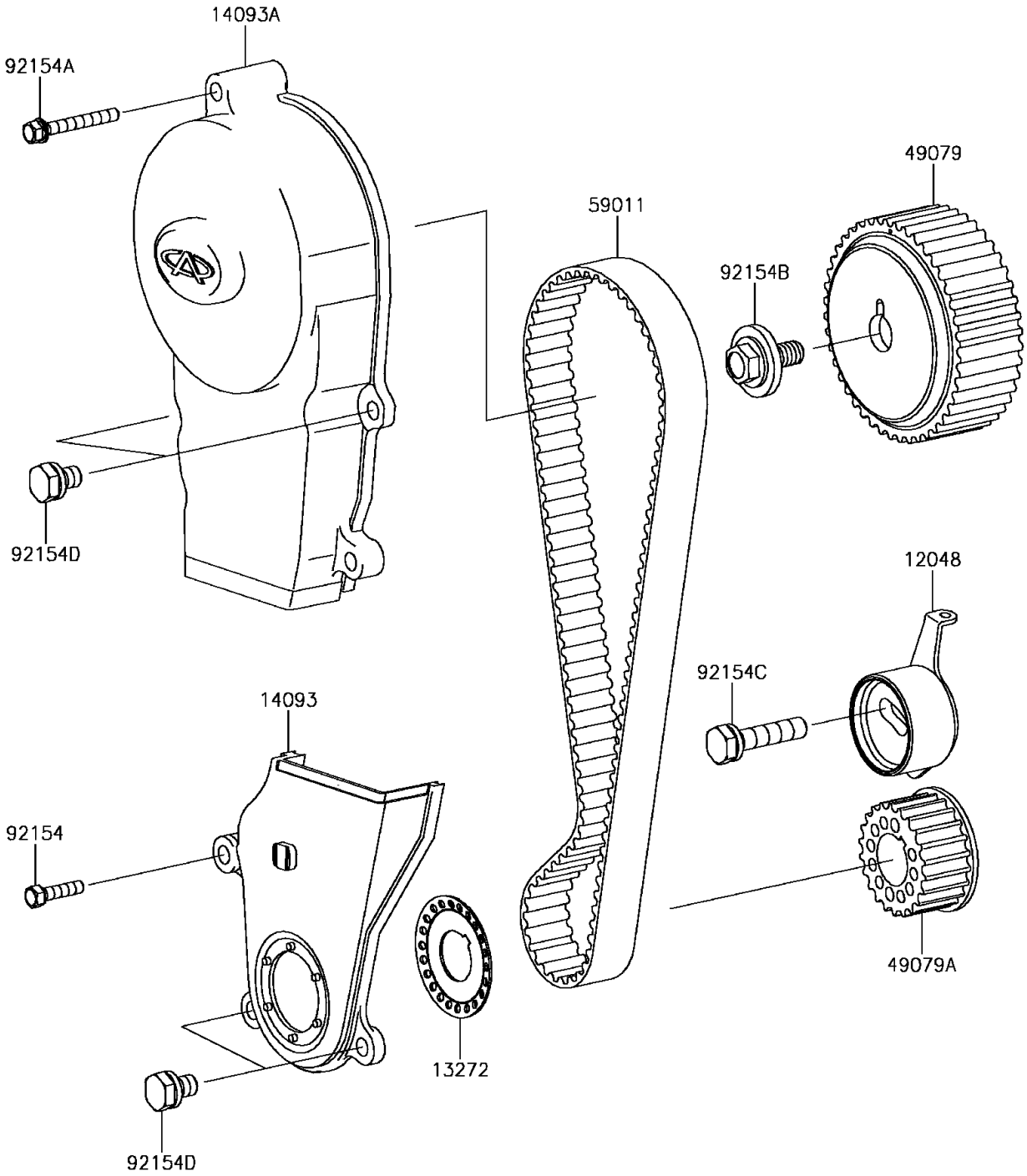

© 2026 Kawasaki Motors Corp., U.S.A.

2017 MULE PRO-FX™ EPS CAMO

PARTS LIST

Timing Belt

ITEM NAME	PART NUMBER	QUANTITY

© 2026 Kawasaki Motors Corp., U.S.A.