1993 KDX250

PARTS DIAGRAM

Clutch

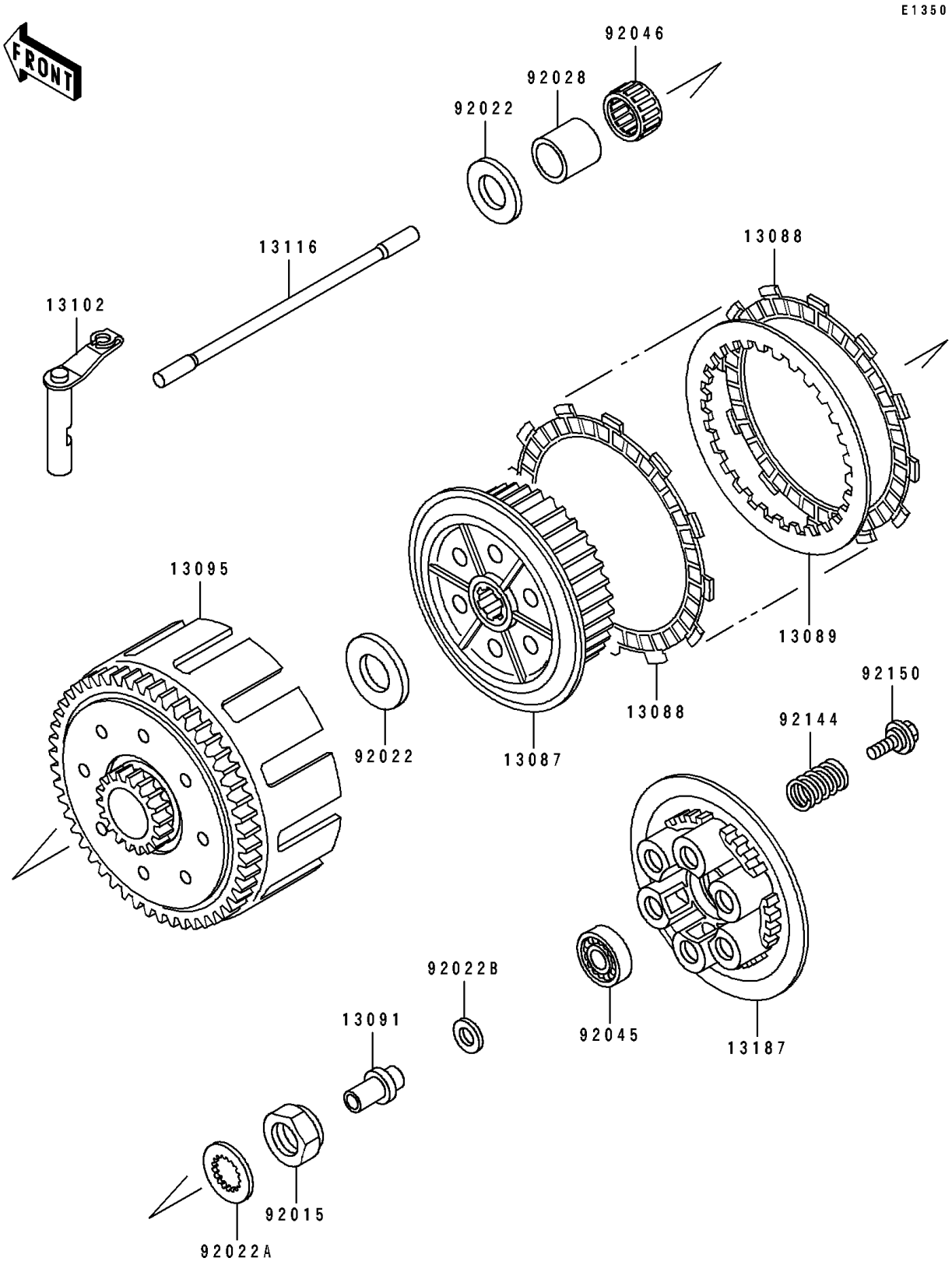

© 2026 Kawasaki Motors Corp., U.S.A.

1993 KDX250

PARTS LIST

Clutch

ITEM NAME	PART NUMBER	QUANTITY
HUB-CLUTCH (Ref # 13087)	13087-1138	1
PLATE-FRICTION (Ref # 13088)	13088-1069	8
PLATE-CLUTCH (Ref # 13089)	13089-1095	7
HOLDER (Ref # 13091)	13091-1707	1
HOUSING-COMP-CLUTCH (Ref # 13095)	13095-1171	1
RELEASE-COMP-CLUTCH (Ref # 13102)	13102-1110	1
ROD-PUSH,L=205 (Ref # 13116)	13116-1124	1
PLATE-CLUTCH OPERATING (Ref # 13187)	13187-1060	1
NUT,20MM (Ref # 92015)	92015-1725	1
WASHER,22.3X38X2.0 (Ref # 92022)	92022-1836	2
WASHER (Ref # 92022A)	92022-1942	1
WASHER,12.3X20X0.5 (Ref # 92022B)	92022-269	AR
BUSHING (Ref # 92028)	92028-1551	1
BEARING-BALL,6001C3ML01 (Ref # 92045)	92045-1235	1
BEARING-NEEDLE (Ref # 92046)	92046-1193	1
SPRING,CLUTCH (Ref # 92144)	92144-1559	6
BOLT,6X22 (Ref # 92150)	92150-1489	6

© 2026 Kawasaki Motors Corp., U.S.A.