2014 VULCAN® 1700 VAQUERO® ABS

Kawasaki
Let the Good Times Roll®

PARTS DIAGRAM

Fuel Evaporative System(KEF-KFF)

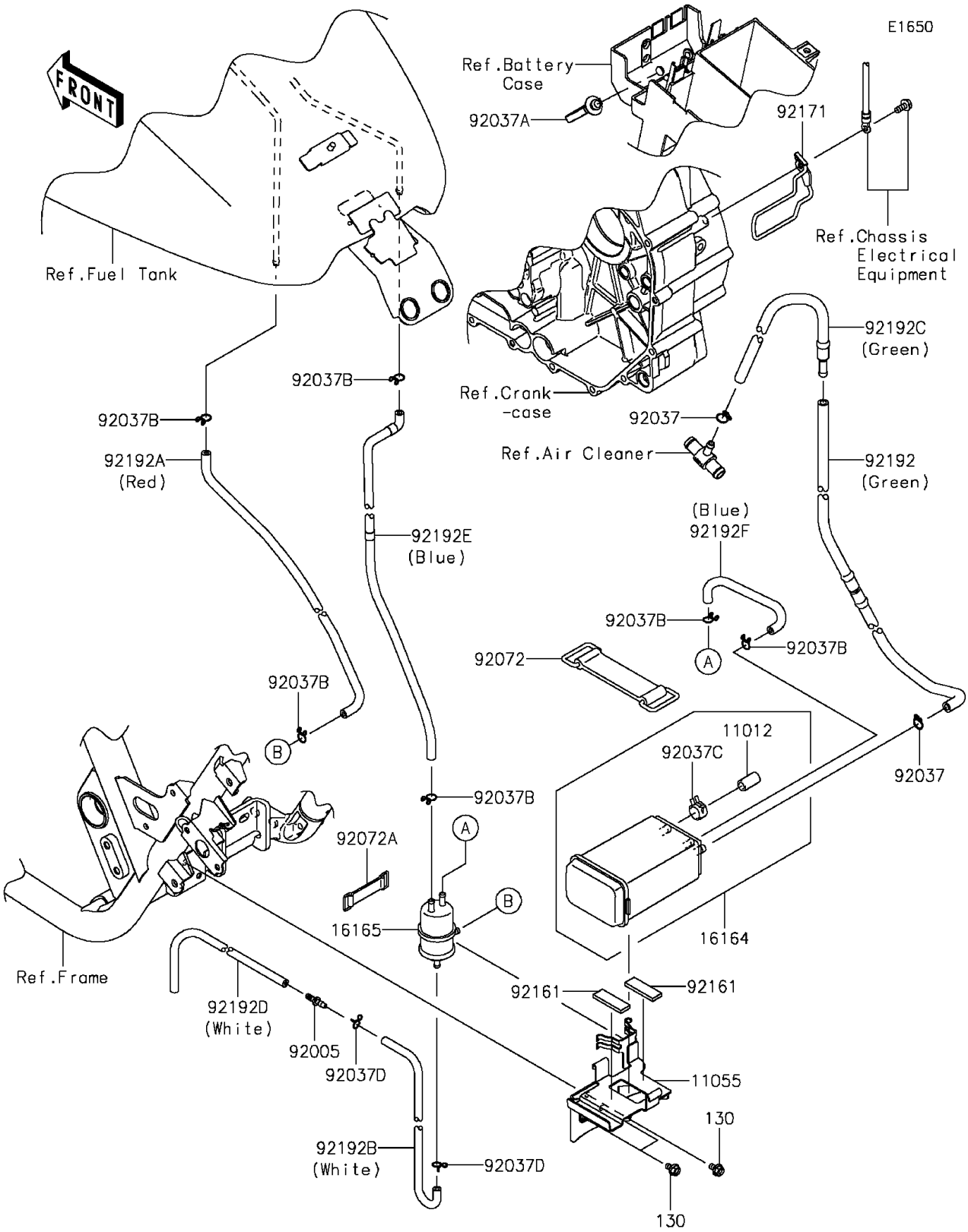

© 2026 Kawasaki Motors Corp., U.S.A.

2014 VULCAN® 1700 VAQUERO® ABS

PARTS LIST

Fuel Evaporative System(KEF-KFF)

ITEM NAME	PART NUMBER	QUANTITY

© 2026 Kawasaki Motors Corp., U.S.A.