2004 KDX220R

PARTS DIAGRAM

Meter(s)

F2530

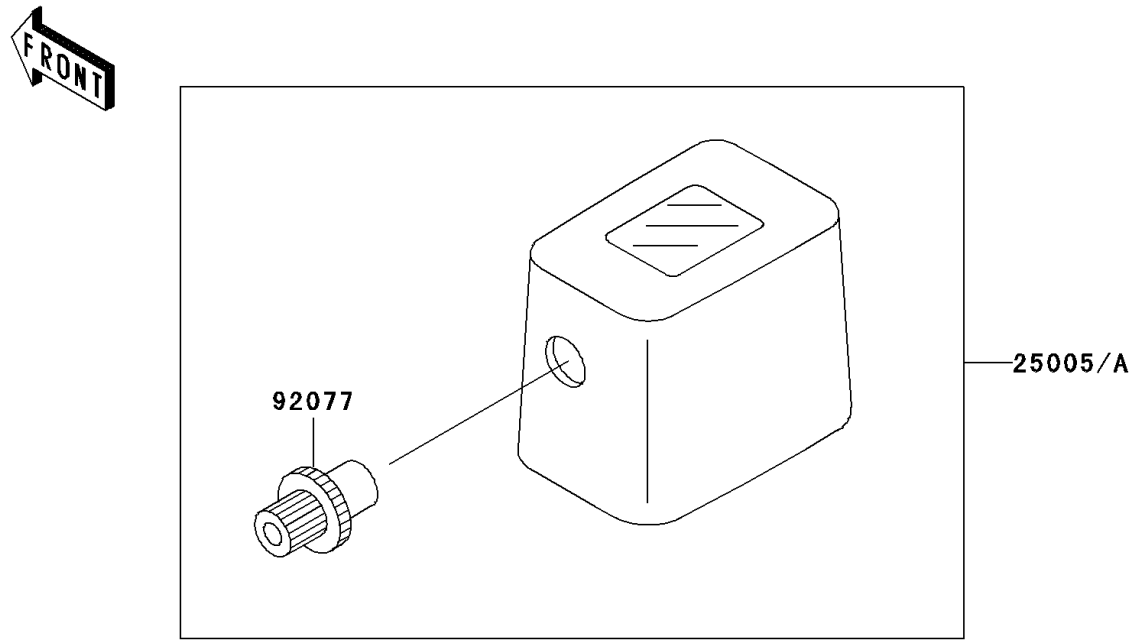

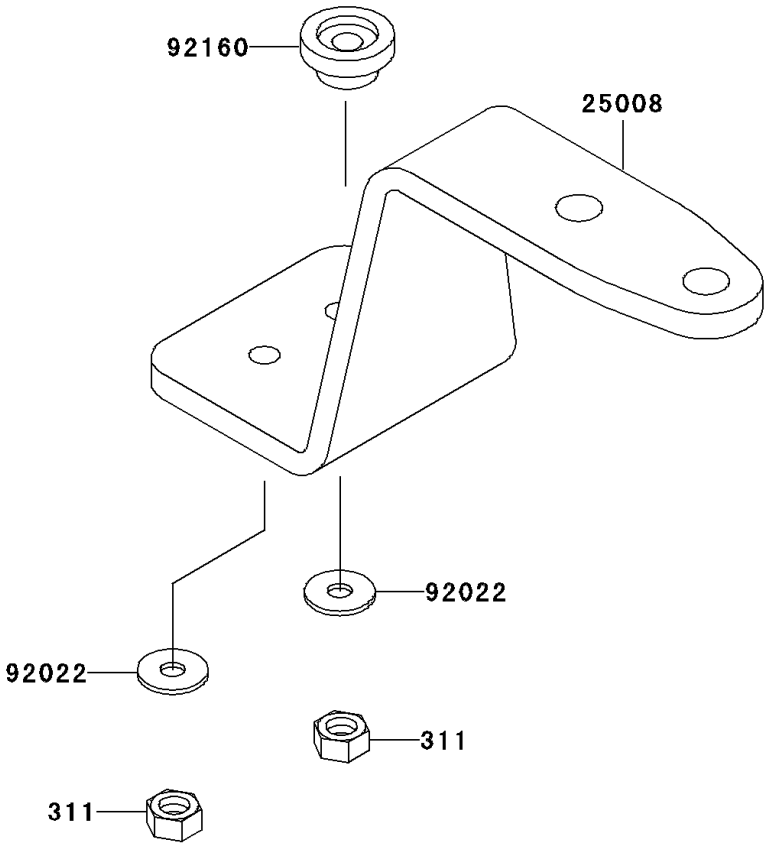

© 2026 Kawasaki Motors Corp., U.S.A.

2004 KDX220R

PARTS LIST

Meter(s)

ITEM NAME	PART NUMBER	QUANTITY
NUT-HEX (Ref # 311)	311B0400	2
BRACKET-METER (Ref # 25008)	25008-1196	1
WASHER,4.3X12.5X1 (Ref # 92022)	92022-1888	2
KNOB,TRIP (Ref # 92077)	92077-1114	1
DAMPER (Ref # 92160)	92160-1569	1
SPEEDOMETER,TRIP(KM) (Ref # 25005)	25005-1572	1
SPEEDOMETER,TRIP(MILE) (Ref # 25005A)	25005-1573	1

© 2026 Kawasaki Motors Corp., U.S.A.