2002 KDX200

PARTS DIAGRAM

Engine Mount

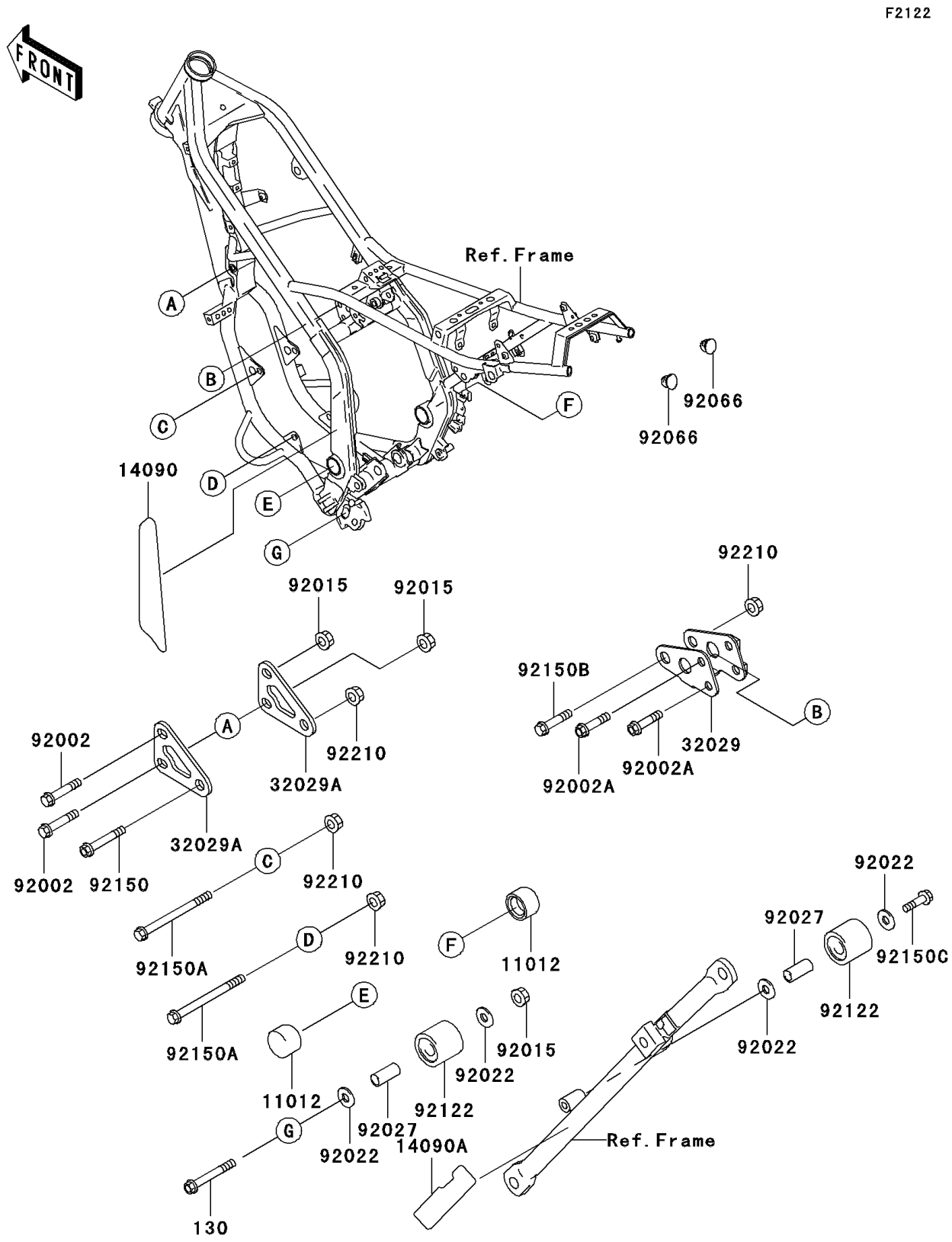

© 2026 Kawasaki Motors Corp., U.S.A.

2002 KDX200

PARTS LIST

Engine Mount

ITEM NAME	PART NUMBER	QUANTITY
BOLT-FLANGED,8X55 (Ref # 130)	130G0855	1
CAP,AXLE NUT (Ref # 11012)	11012-1591	2
COVER (Ref # 14090)	14090-1514	1
COVER (Ref # 14090A)	14090-1557	1
BRACKET-ENGINE,HEAD,RR (Ref # 32029)	32029-1913	1
BRACKET-ENGINE (Ref # 32029A)	32029-1944	2
BOLT (Ref # 92002)	92002-1221	2
BOLT,FLANGED,8X47 (Ref # 92002A)	92002-1850	2
NUT,8MM (Ref # 92015)	92015-1432	3
WASHER,8.5X20X1.6 (Ref # 92022)	92022-1561	4
COLLAR,CHAIN ROLLER (Ref # 92027)	92027-1670	2
PLUG (Ref # 92066)	92066-1093	2
ROLLER,CHAIN GUIDE (Ref # 92122)	92122-1153	2
BOLT,FLANGED,10X57 (Ref # 92150)	92150-1227	1
BOLT,FLANGED,10X105 (Ref # 92150A)	92150-1624	2
BOLT,FLANGED,10X51 (Ref # 92150B)	92150-1719	1
BOLT,FLANGED,8X40 (Ref # 92150C)	92150-1961	1
NUT,LOCK,FLANGED,10MM (Ref # 92210)	92210-1080	4

© 2026 Kawasaki Motors Corp., U.S.A.