2005 KDX200

PARTS DIAGRAM

Owner's Tools

F2810

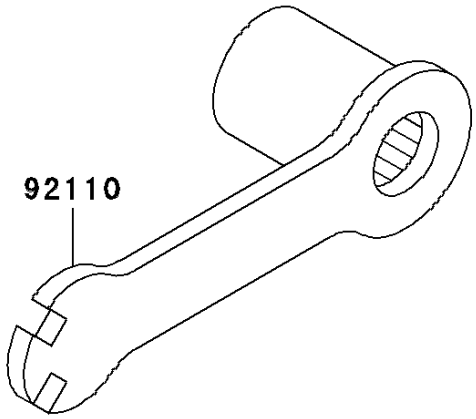

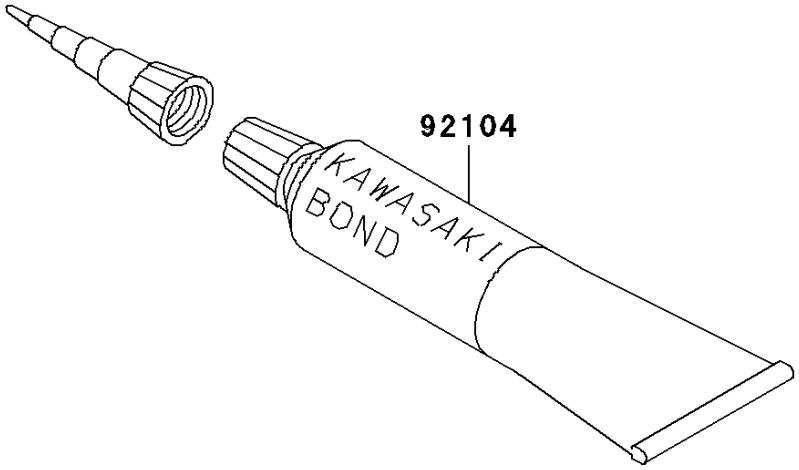

© 2026 Kawasaki Motors Corp., U.S.A.

2005 KDX200

PARTS LIST

Owner's Tools

ITEM NAME	PART NUMBER	QUANTITY
GASKET-LIQUID,TUBE,100G,SILVER (Ref # 92104)	92104-002	1
TOOL-WRENCH,BOX,21MM&SPOKE (Ref # 92110)	92110-1142	1

© 2026 Kawasaki Motors Corp., U.S.A.