2004 KDX200

PARTS DIAGRAM

Front Brake

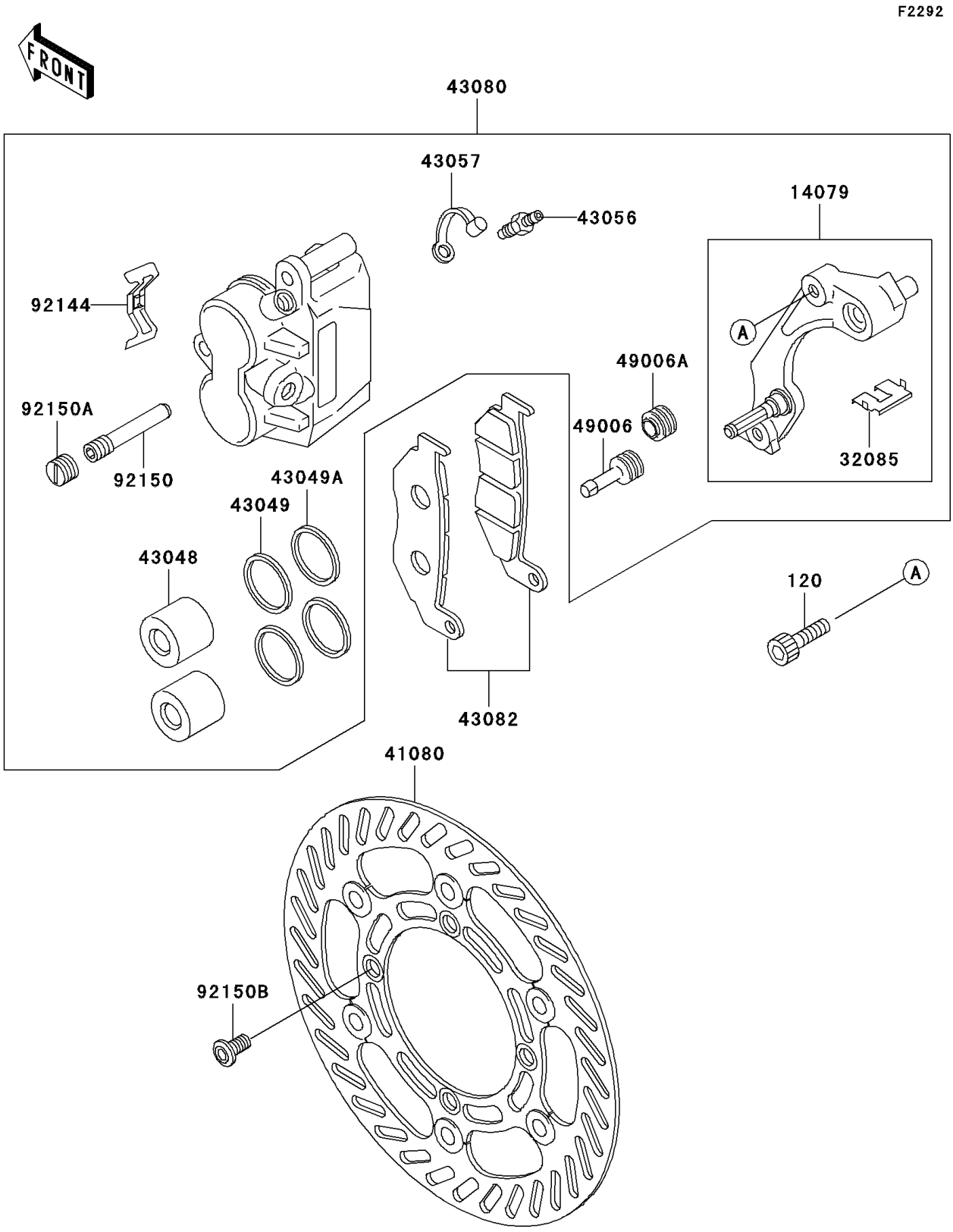

© 2026 Kawasaki Motors Corp., U.S.A.

2004 KDX200

PARTS LIST

Front Brake

ITEM NAME	PART NUMBER	QUANTITY
BOLT-SOCKET,8X40 (Ref # 120)	120P0840	2
HOLDER-ASSY,FRONT CALIPER (Ref # 14079)	14079-1097	1
STOPPER,PAD (Ref # 32085)	32085-1361	1
DISC,FR (Ref # 41080)	41080-1377	1
PISTON-CALIPER (Ref # 43048)	43048-1064	2
PACKING,PISTON SEAL (Ref # 43049)	43049-1060	2
PACKING,PISTON SEAL (Ref # 43049A)	43049-1061	2
BREATHER (Ref # 43056)	43056-1055	1
CAP-BREATHER (Ref # 43057)	43057-1001	1
CALIPER-SUB-ASSY,FR,LH (Ref # 43080)	43080-5119	1
PAD-ASSY-BRAKE (Ref # 43082)	43082-1172	1
BOOT,CALIPER (Ref # 49006)	49006-1088	1
BOOT,CALIPER (Ref # 49006A)	49006-1242	1
SPRING,PAD (Ref # 92144)	92144-1721	1
BOLT,HANGER (Ref # 92150)	92150-1691	1
BOLT,PLUG (Ref # 92150A)	92150-1692	1
BOLT,DISC PLATE,8X15 (Ref # 92150B)	92150-1811	4

© 2026 Kawasaki Motors Corp., U.S.A.