2005 KDX200

PARTS DIAGRAM

Shock Absorber(s)

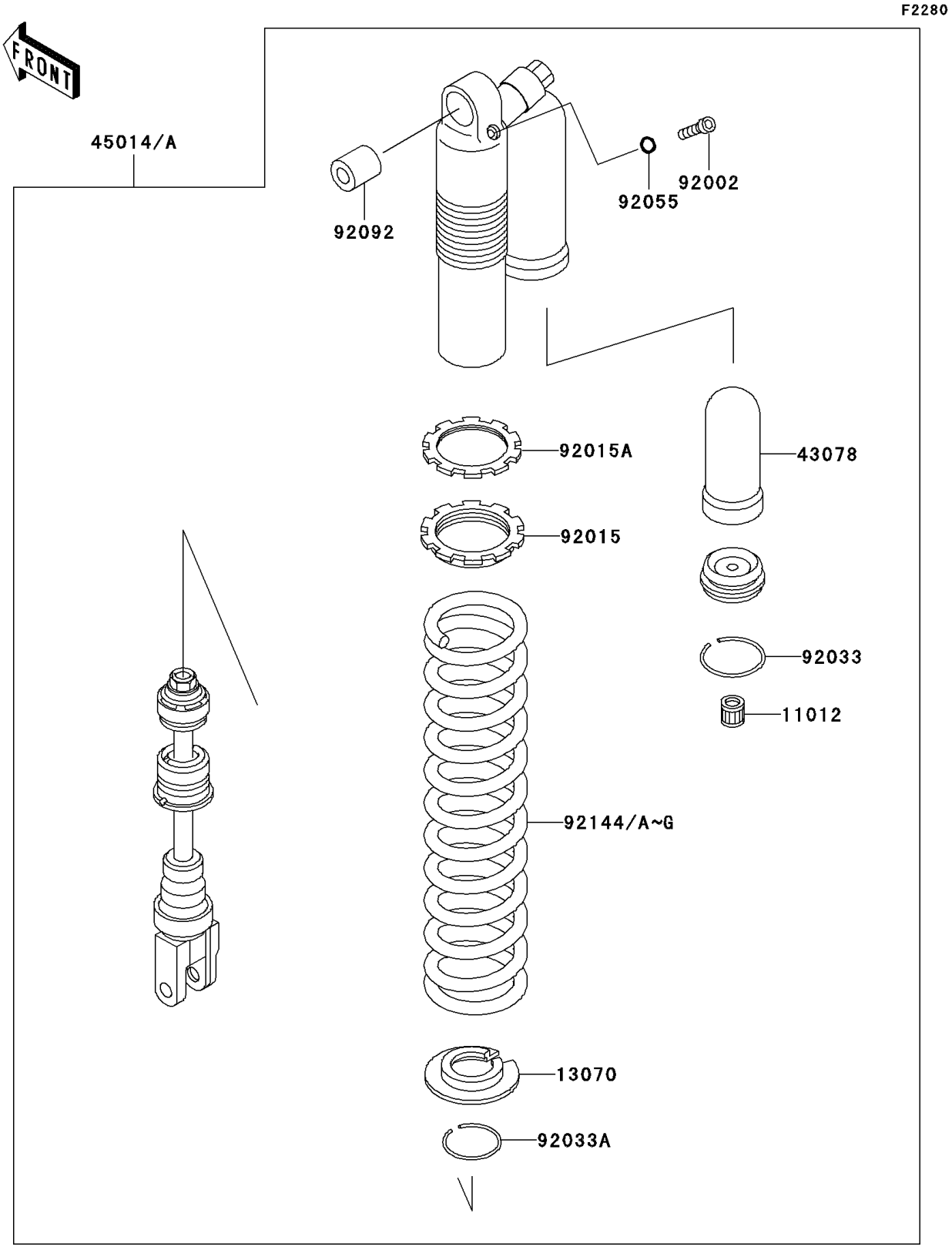

© 2026 Kawasaki Motors Corp., U.S.A.

2005 KDX200

PARTS LIST

Shock Absorber(s)

ITEM NAME	PART NUMBER	QUANTITY
CAP,VALVE AIR (Ref # 11012)	11012-1391	1
GUIDE,SPRING (Ref # 13070)	13070-1165	1
RESERVOIR,SHOCKABSORBER (Ref # 43078)	43078-1094	1
SHOCKABSORBER,I.SILVER (Ref # 45014A)	45014-1596-8V	1
BOLT,DRAIN (Ref # 92002)	92002-1955	1
NUT,SPRING ADJUST (Ref # 92015)	92015-1703	1
NUT,SPRING ADJUST LOCK (Ref # 92015A)	92015-1704	1
RING-SNAP (Ref # 92033)	92033-1209	1
RING-SNAP,SHOCKABSORBER (Ref # 92033A)	92033-1228	1
RING-O (Ref # 92055)	92055-1383	1
BUSHING-RUBBER,SHOCKABSORBER (Ref # 92092)	92092-1062	1
SPRING,SHOCKABSORBER,K=5.0,SIL (Ref # 92144A)	92144-1830-8V	1
SPRING,SHOCKABSORBER,K=4.8,SIL (Ref # 92144C)	92144-1837-8V	1
SPRING,SHOCKABSORBER,K=5.2,SIL (Ref # 92144E)	92144-1838-8V	1
SPRING,SHOCKABSORBER,K=5.4,SIL (Ref # 92144G)	92144-1839-8V	1

© 2026 Kawasaki Motors Corp., U.S.A.