2004 KDX200

PARTS DIAGRAM

Air Cleaner

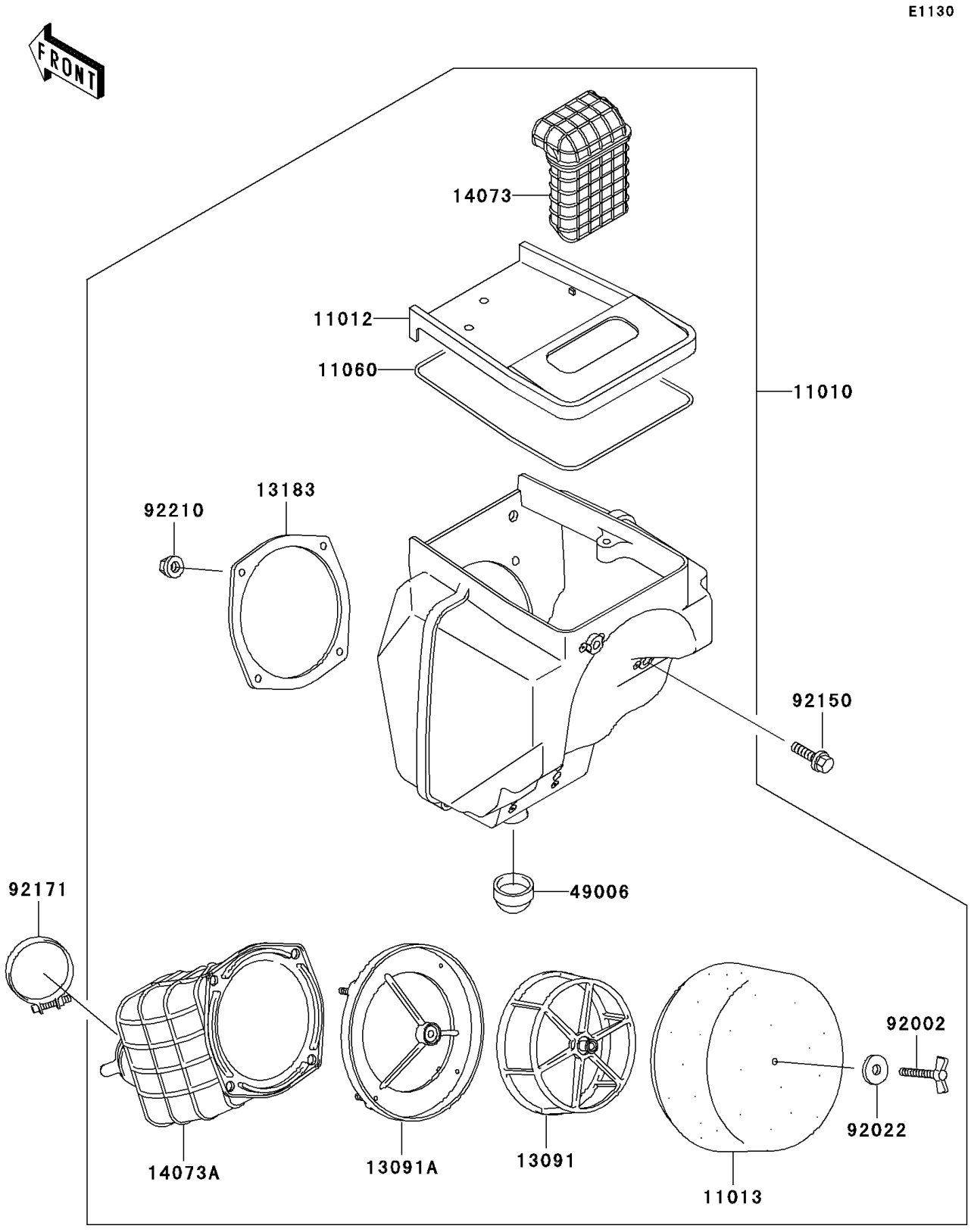

© 2026 Kawasaki Motors Corp., U.S.A.

2004 KDX200

PARTS LIST

Air Cleaner

ITEM NAME	PART NUMBER	QUANTITY
FILTER-ASSY-AIR (Ref # 11010)	11010-1575	1
CAP,AIR FILTER (Ref # 11012)	11012-1913	1
ELEMENT-AIR FILTER (Ref # 11013)	11013-1260	1
GASKET,AIR FILTER (Ref # 11060)	11060-1664	1
HOLDER,ELEMENT (Ref # 13091)	13091-1454	1
HOLDER (Ref # 13091A)	13091-1951	1
PLATE,DUCT FITTING (Ref # 13183)	13183-1046	1
DUCT,AIR INLET (Ref # 14073)	14073-1577	1
DUCT,AIR FILTER (Ref # 14073A)	14073-1597	1
BOOT (Ref # 49006)	49006-1248	1
BOLT,WING (Ref # 92002)	92002-1719	1
WASHER,6.5X20X1.6 (Ref # 92022)	92022-125	1
BOLT,6X20 (Ref # 92150)	92150-1892	3
CLAMP (Ref # 92171)	92171-1563	1
NUT (Ref # 92210)	92210-1164	4

© 2026 Kawasaki Motors Corp., U.S.A.