1997 KDX200

PARTS DIAGRAM

Gear Change Drum/Shift Fork(s)

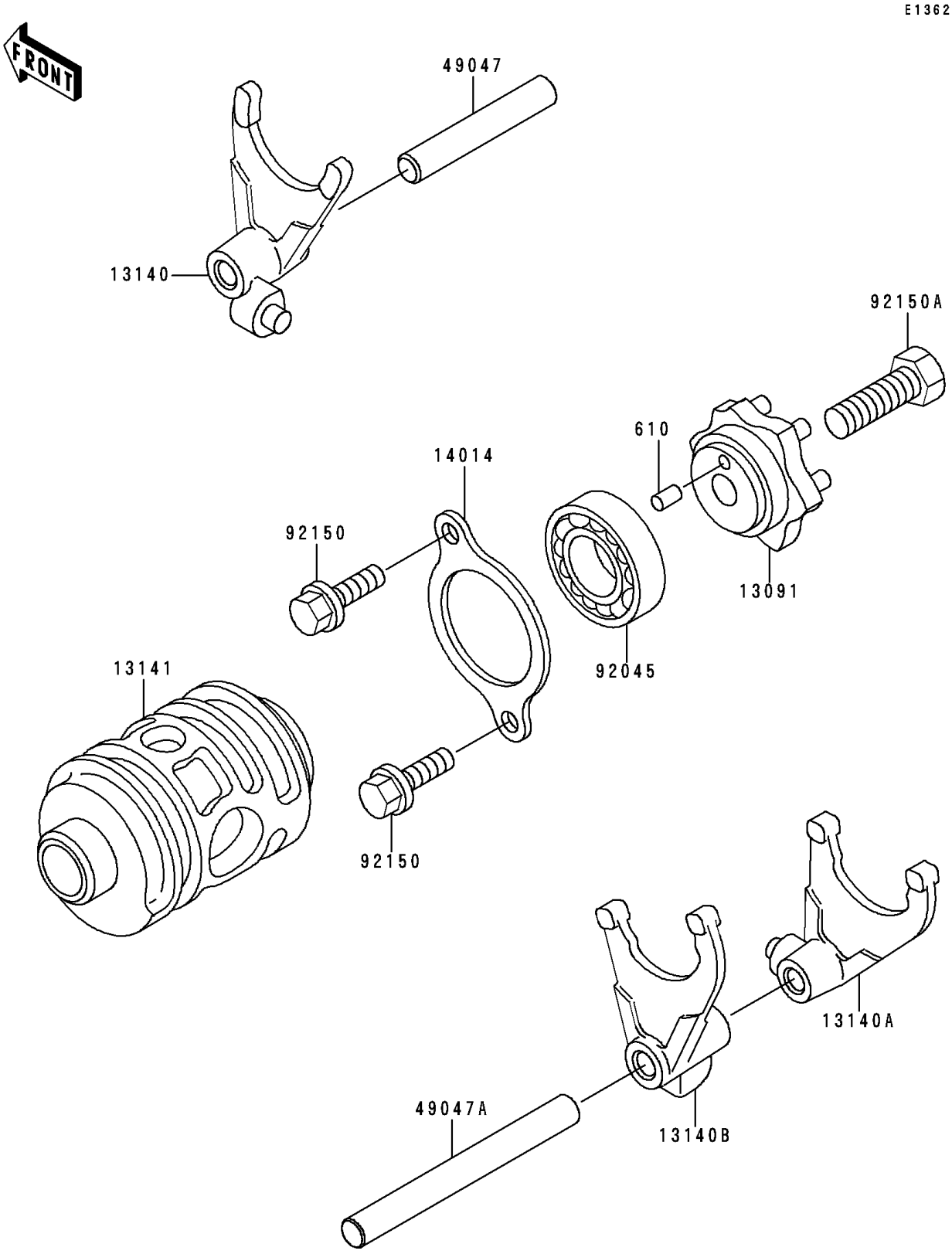

© 2026 Kawasaki Motors Corp., U.S.A.

1997 KDX200

PARTS LIST

Gear Change Drum/Shift Fork(s)

ITEM NAME	PART NUMBER	QUANTITY
ROLLER,4X8 (Ref # 610)	610A0408	1
HOLDER,CHANGE DRUM (Ref # 13091)	13091-1364	1
FORK-SHIFT,5TH&TOP (Ref # 13140)	13140-1074	1
FORK-SHIFT,LOW&4TH (Ref # 13140A)	13140-1243	1
FORK-SHIFT,2ND&3RD (Ref # 13140B)	13140-1244	1
DRUM-CHANGE (Ref # 13141)	13141-1117	1
PLATE-POSITION (Ref # 14014)	14014-1020	1
ROD-SHIFT,8X58 (Ref # 49047)	49047-1089	1
ROD-SHIFT,8X82.5 (Ref # 49047A)	49047-1090	1
BEARING-BALL (Ref # 92045)	92045-1319	1
BOLT,6X12 (Ref # 92150)	92150-1868	2
BOLT,8X25 (Ref # 92150A)	92150-1911	1

© 2026 Kawasaki Motors Corp., U.S.A.