1989 KDX200

PARTS DIAGRAM

Rear Hub

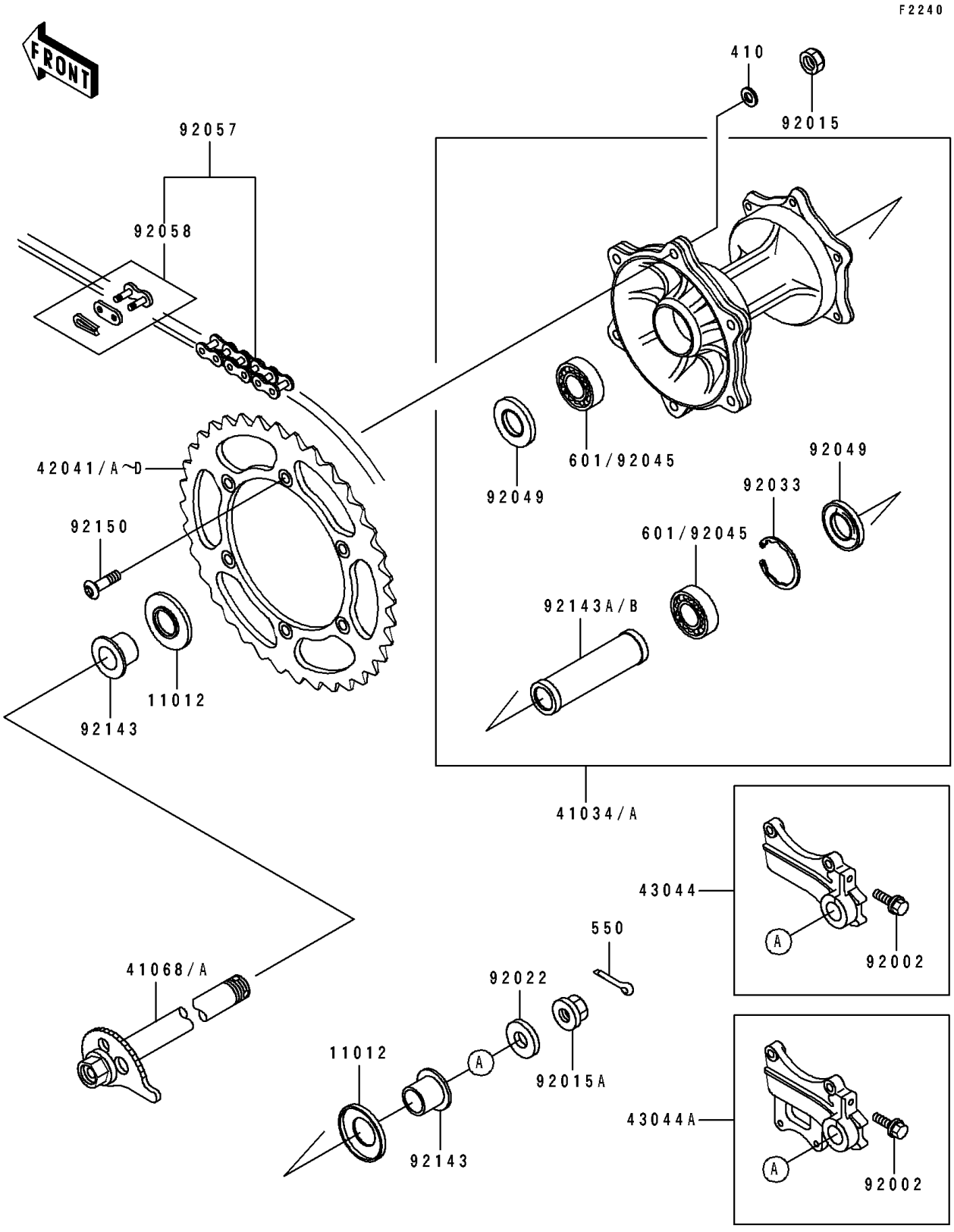

© 2026 Kawasaki Motors Corp., U.S.A.

1989 KDX200

PARTS LIST

Rear Hub

ITEM NAME	PART NUMBER	QUANTITY
CAP,REAR AXLE (Ref # 11012)	11012-1581	2
DRUM-ASSY,REAR BRAKE (Ref # 41034)	41034-1184	1
AXLE,RR (Ref # 41068)	41068-1271	1
SPROCKET-HUB,47T (Ref # 42041)	42041-1274	1
SPROCKET-HUB,45T (Ref # 42041A)	42041-1326	1
SPROCKET-HUB,46T (Ref # 42041B)	42041-1327	1
SPROCKET-HUB,48T (Ref # 42041C)	42041-1328	1
SPROCKET-HUB,49T (Ref # 42041D)	42041-1329	1
HOLDER-COMP-CALIPER (Ref # 43044)	43044-1084	1
BOLT,6X18 (Ref # 92002)	92002-1952	1
NUT,LOCK,8MM (Ref # 92015)	92015-1124	6
NUT,LOCK,20MM (Ref # 92015A)	92015-1770	1
WASHER,20.1X34X2.0 (Ref # 92022)	92022-1994	1
RING-SNAP,42MM (Ref # 92033)	92033-1041	1
SEAL-OIL,BJNC2 25425 (Ref # 92049)	92049-1203	2
CHAIN,DRIVE,DID520KX110L (Ref # 92057)	92057-1215	1
JOINT-CHAIN (Ref # 92058)	92058-1051	1
COLLAR,RR AXLE,L=22 (Ref # 92143)	92143-1259	2
COLLAR,RR BRAKE DRUM,L=105 (Ref # 92143A)	92143-1260	1
BOLT,SOCKET,8X28 (Ref # 92150)	92150-1196	6
WASHER-PLAIN-SMALL,8MM (Ref # 410)	410B0800	6
BEARING-BALL,#6004UG (Ref # 601)	601B6004UG	2

© 2026 Kawasaki Motors Corp., U.S.A.