1989 KDX200

PARTS DIAGRAM

Crankcase

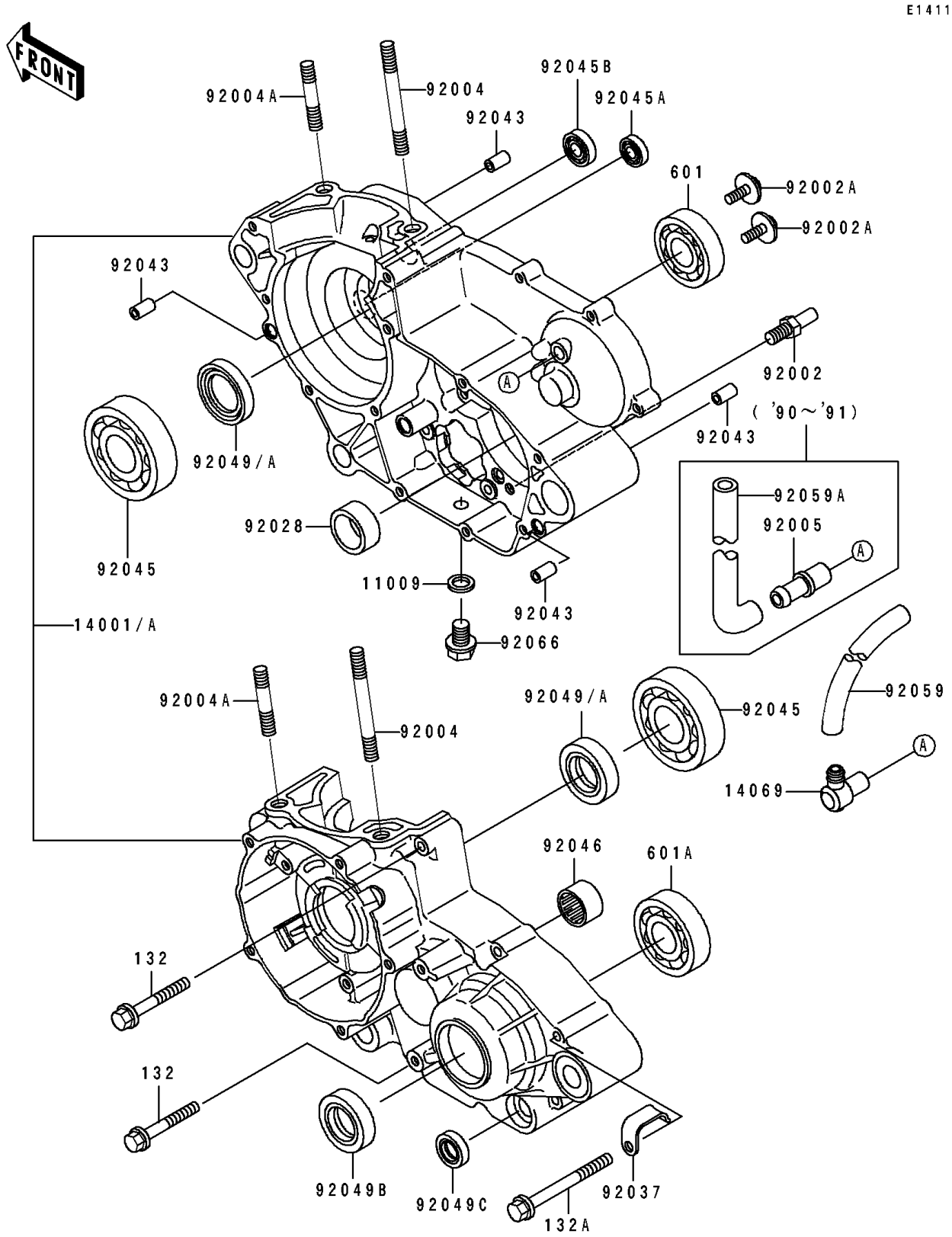

© 2026 Kawasaki Motors Corp., U.S.A.

1989 KDX200

PARTS LIST

Crankcase

ITEM NAME	PART NUMBER	QUANTITY
GASKET,10.5X16X1,DRAIN PLUG (Ref # 11009)	92065-058	1
SET-CRANKCASE (Ref # 14001)	14001-5262	1
BREATHER (Ref # 14069)	14069-003	1
BOLT,8X15 (Ref # 92002)	92002-1601	1
BOLT,6X16 (Ref # 92002A)	92002-1659	2
STUD,8X60 (Ref # 92004)	92004-1132	2
STUD,8X28.5 (Ref # 92004A)	92004-1142	2
BUSHING,23X30X13 (Ref # 92028)	92028-132	1
CLAMP,HARNESS (Ref # 92037)	92037-1318	1
PIN,DOWEL,6.3X8X14 (Ref # 92043)	92042-007	4
BEARING-BALL,6305JR2C3 (Ref # 92045)	92045-1120	2
BEARING-BALL (Ref # 92045A)	92045-1211	1
BEARING-BALL (Ref # 92045B)	92045-1212	1
BEARING-NEEDLE,#7E-HKS162412-1 (Ref # 92046)	92046-026	1
SEAL-OIL,TBJ25407 (Ref # 92049A)	92049-1068	2
SEAL-OIL,TB3040 (Ref # 92049B)	92050-033	1
SEAL-OIL,TB13225.5 (Ref # 92049C)	92051-005	1
TUBE,6X9X360 (Ref # 92059)	92059-103	1
PLUG,DRAIN (Ref # 92066)	92066-1241	1
BOLT-FLANGED-SMALL (Ref # 132)	132G0640	10
BOLT-FLANGED-SMALL (Ref # 132A)	132G0660	1
BEARING-BALL,#6204C3 (Ref # 601)	601B6204	1
BEARING-BALL,#6205C3 (Ref # 601A)	601B6205	1

© 2026 Kawasaki Motors Corp., U.S.A.