1990 KD80

PARTS DIAGRAM

Fuel Tank

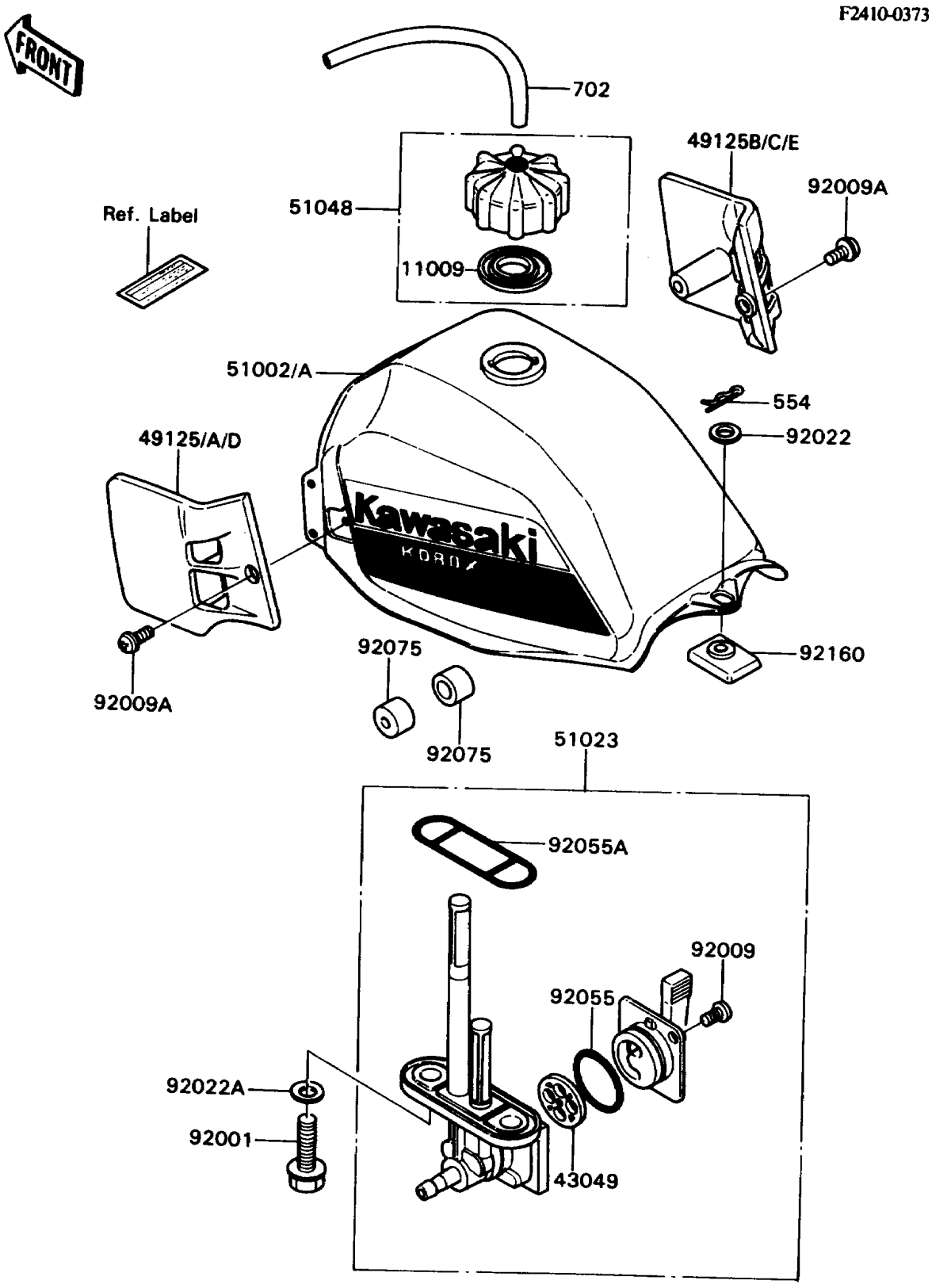

© 2026 Kawasaki Motors Corp., U.S.A.

1990 KD80

PARTS LIST

Fuel Tank

ITEM NAME	PART NUMBER	QUANTITY
GASKET,FUEL TANK CAP (Ref # 11009)	51059-006	1
PACKING,FUEL TAP LEVER (Ref # 43049)	43049-1017	1
SHROUD,LH,L.GREEN (Ref # 49125D)	49125-1062-6W	1
SHROUD,RH,L.GREEN (Ref # 49125E)	49125-1063-6W	1
TANK-COMP-FUEL,L.GREEN (Ref # 51002)	51002-5413-7F	1
TAP-ASSY,FUEL (Ref # 51023)	51023-1155	1
CAP-ASSY-TANK,FUEL (Ref # 51048)	51048-1004	1
BOLT,6X20 (Ref # 92001)	92001-1091	2
SCREW,3X5 (Ref # 92009)	92009-1123	2
SCREW,6X10,WHITE (Ref # 92009A)	92009-1286	5
WASHER,10.5X24X1.6 (Ref # 92022)	92022-1137	1
WASHER,6.2X11X1.5 (Ref # 92022A)	92022-183	2
RING-O,FUEL TAP LEVER (Ref # 92055)	92055-1111	1
RING-O,FUEL TAP PACKING (Ref # 92055A)	92055-1112	1
DAMPER,FUEL TANK,FR (Ref # 92075)	92075-1115	2
DAMPER,FUEL TANK,RR (Ref # 92160)	92160-1014	1
PIN-SNAP,10MM (Ref # 554)	554A1000	1
TUBE-RUBBER,5X8X400 (Ref # 702)	702A05400	1

© 2026 Kawasaki Motors Corp., U.S.A.