2010 Bayou® 250

PARTS DIAGRAM

Taillight(s)

F2720

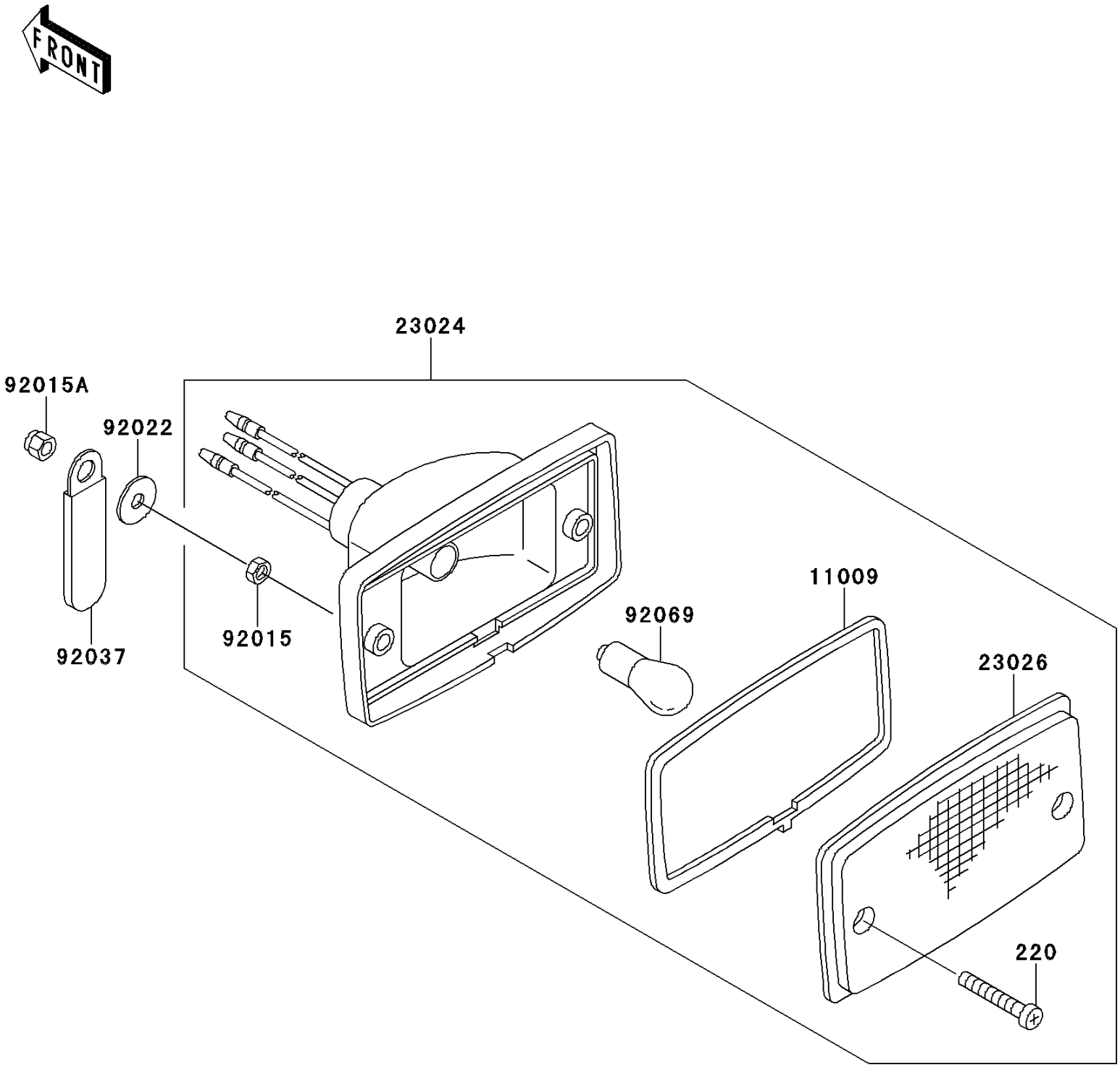

© 2026 Kawasaki Motors Corp., U.S.A.

2010 Bayou® 250

PARTS LIST

Taillight(s)

ITEM NAME	PART NUMBER	QUANTITY
SCREW-PAN-CROS,4X25 (Ref # 220)	220AA0425	4
GASKET,TAIL LAMP (Ref # 11009)	11009-4004	2
LAMP-ASSY-TAIL (Ref # 23024)	23024-1139	2
LENS,TAIL LAMP (Ref # 23026)	23026-1239	2
NUT,4MM (Ref # 92015)	92015-1550	4
NUT (Ref # 92015A)	92015-1695	4
WASHER,4.5X14X0.6 (Ref # 92022)	92022-1681	4
CLAMP,L=45 (Ref # 92037)	92037-1539	2
BULB,12V 27/8W (Ref # 92069)	92069-059	2

© 2026 Kawasaki Motors Corp., U.S.A.