2008 Bayou® 250

PARTS DIAGRAM

Generator

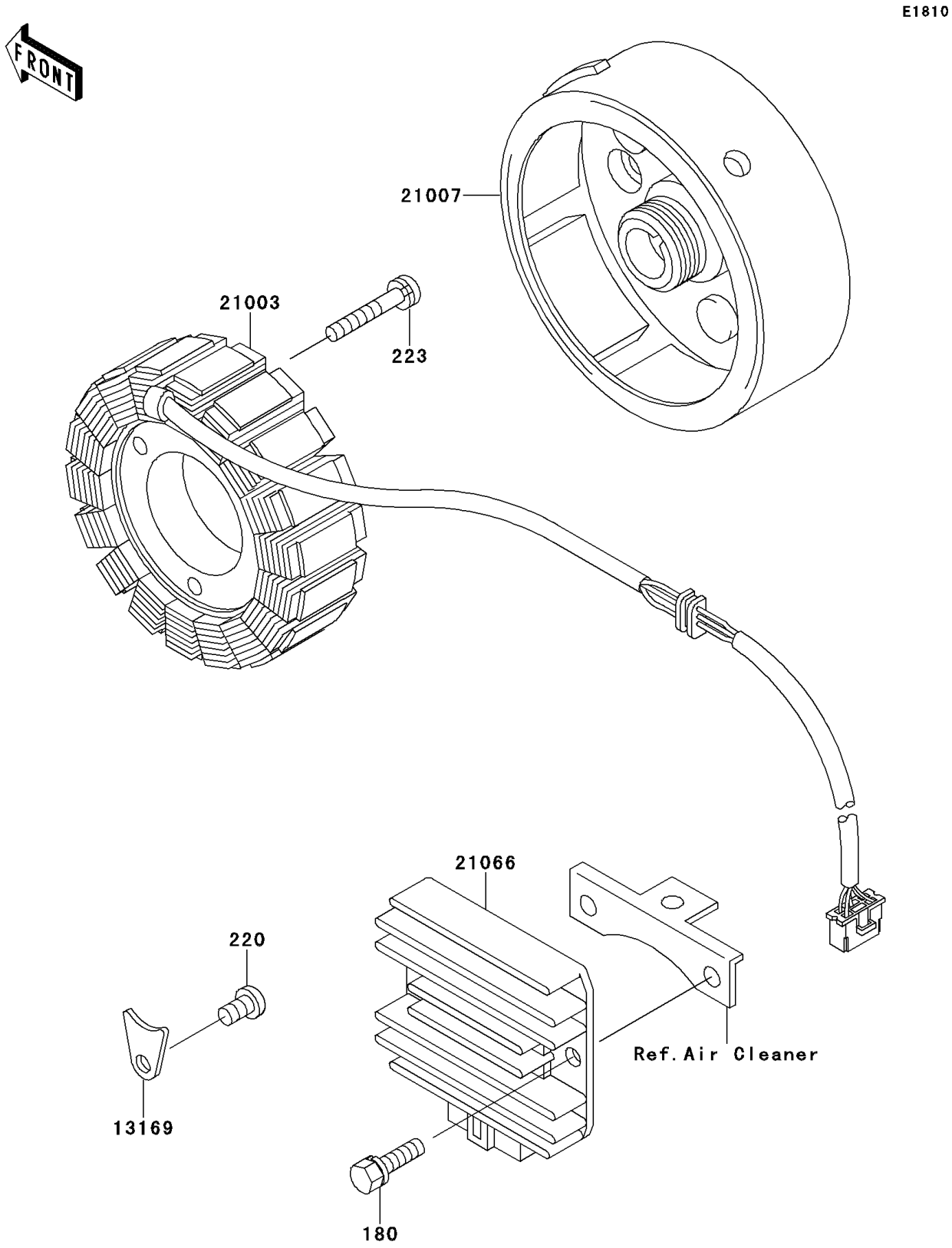

© 2026 Kawasaki Motors Corp., U.S.A.

2008 Bayou® 250

PARTS LIST

Generator

ITEM NAME	PART NUMBER	QUANTITY
BOLT-UPSET-WS,6X22 (Ref # 180)	180AA0622	2
SCREW-PAN-CROSS,6X10 (Ref # 220)	220AA0610	1
SCREW-PAN-WS-CROS,5X30 (Ref # 223)	223AA0530	3
PLATE,HARNESS (Ref # 13169)	13169-1788	1
STATOR (Ref # 21003)	21003-1287	1
ROTOR,GENERATOR (Ref # 21007)	21007-1286	1
REGULATOR-VOLTAGE (Ref # 21066)	21066-1038	1

© 2026 Kawasaki Motors Corp., U.S.A.