2008 Bayou® 250

PARTS DIAGRAM

Gear Change Mechanism

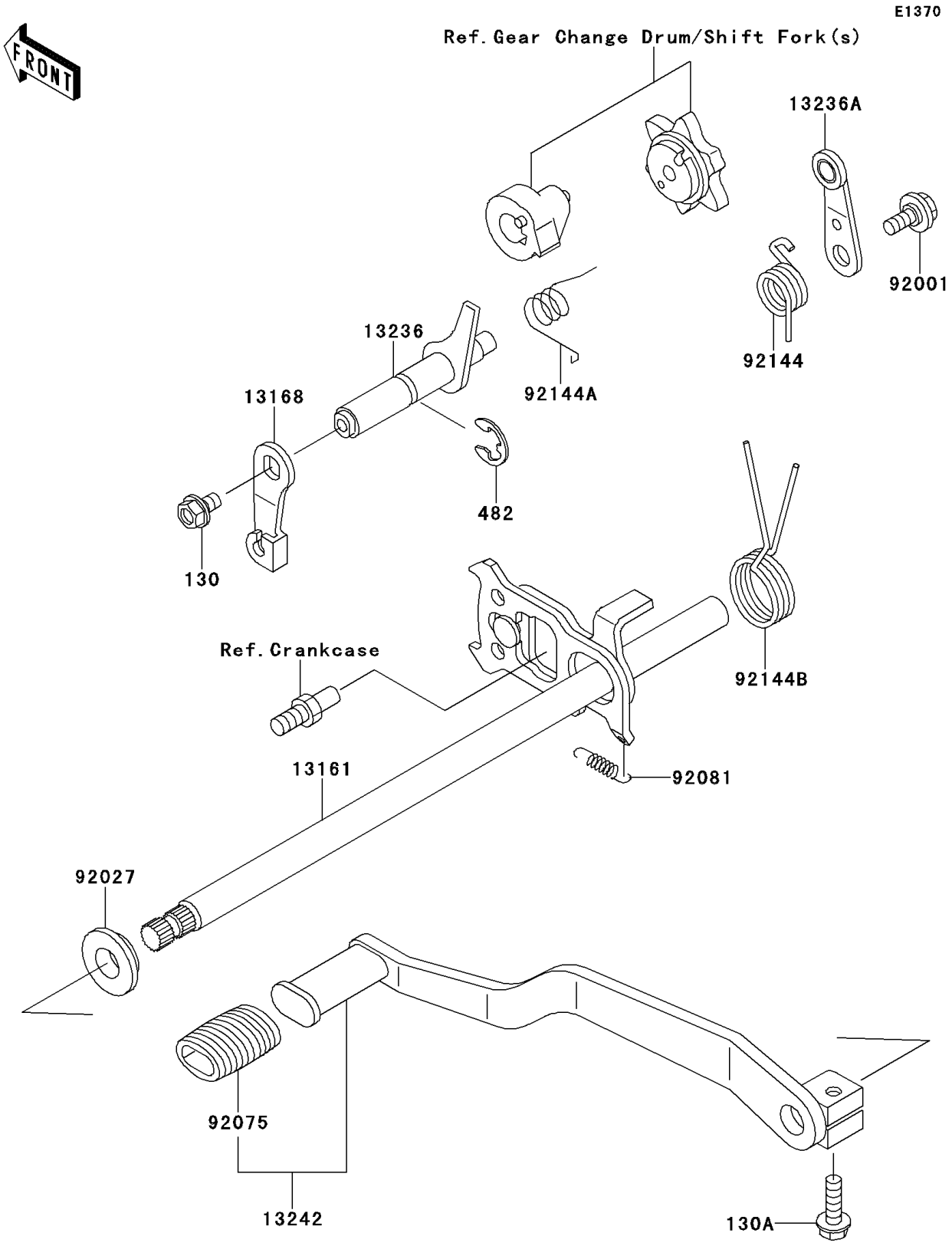

© 2026 Kawasaki Motors Corp., U.S.A.

2008 Bayou® 250

PARTS LIST

Gear Change Mechanism

ITEM NAME	PART NUMBER	QUANTITY
BOLT-FLANGED,6X10 (Ref # 130)	130AB0610	1
BOLT-FLANGED,6X20 (Ref # 130A)	130CB0620	1
CIRCLIP-TYPE-E,10MM (Ref # 482)	482EA0100	1
LEVER-COMP-CHANGE SHAFT (Ref # 13161)	13161-1238	1
LEVER,REVERSE CABLE (Ref # 13168)	13168-1357	1
LEVER-COMP,REVERSE (Ref # 13236)	13236-1157	1
LEVER-COMP,CHANGE POSITION (Ref # 13236A)	13236-1164	1
LEVER-ASSY-CHANGE,PEDAL (Ref # 13242)	13242-1234	1
BOLT,FLANGED,6X14 (Ref # 92001)	92001-1715	1
COLLAR,L=5.2 (Ref # 92027)	92027-1891	1
DAMPER (Ref # 92075)	92075-1585	1
SPRING,CHANGE LEVER (Ref # 92081)	92081-1753	1
SPRING (Ref # 92144)	92144-1162	1
SPRING (Ref # 92144A)	92144-1163	1
SPRING,CHANGE SHAFT RETURN (Ref # 92144B)	92144-1359	1

© 2026 Kawasaki Motors Corp., U.S.A.