# 1999 Bayou 220

## PARTS DIAGRAM

### Optional Parts(Meter)

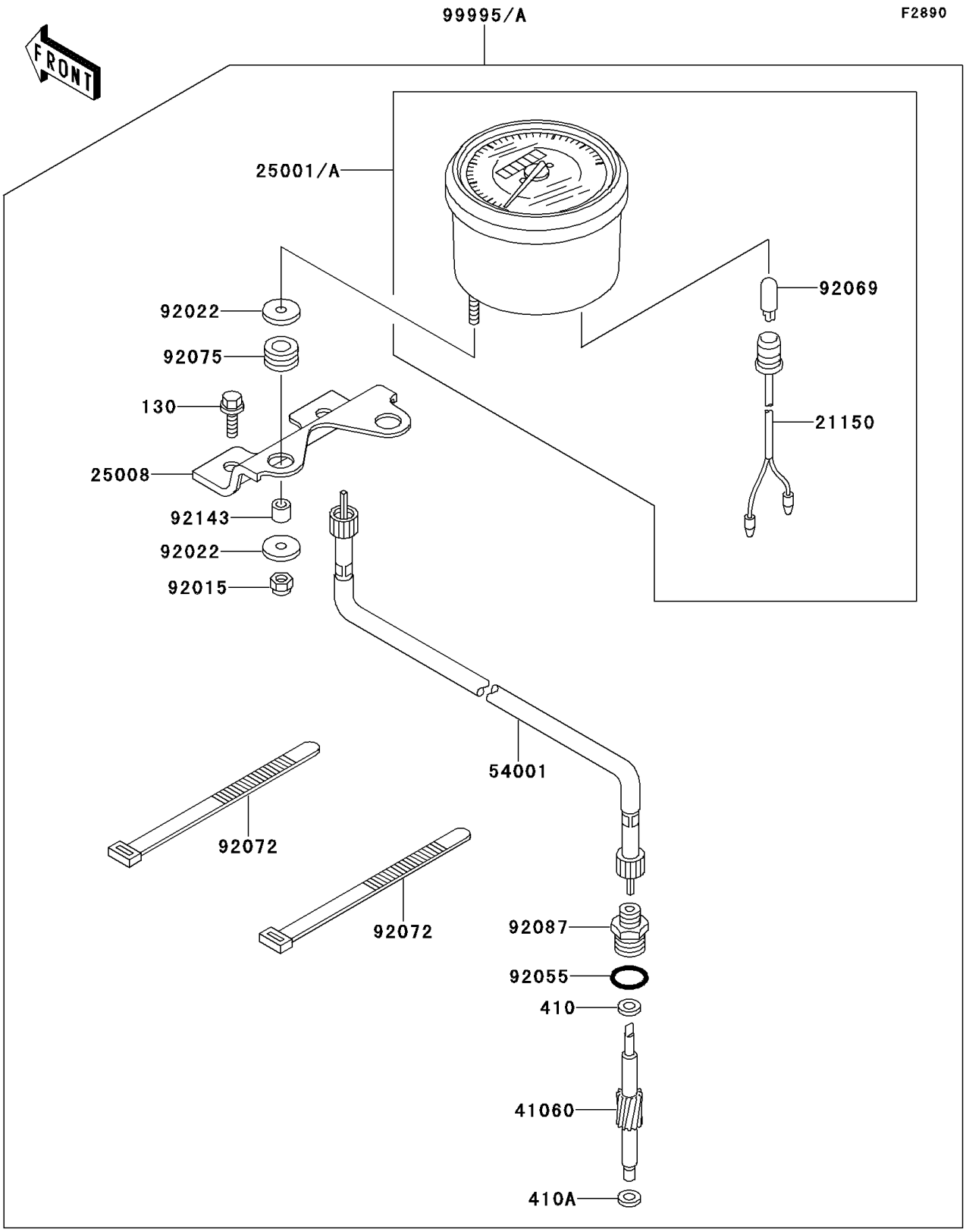


© 2026 Kawasaki Motors Corp., U.S.A.

# 1999 Bayou 220

## PARTS LIST

### Optional Parts(Meter)

| ITEM NAME | PART NUMBER | QUANTITY |
|---|---|---|
| BOLT-FLANGED (Ref # 130) | 130J0812 | 2 |
| WASHER-PLAIN-SMALL,5MM (Ref # 410) | 410B0500 | 1 |
| WASHER-PLAIN-SMALL,6MM (Ref # 410A) | 410B0600 | 1 |
| CORD-ASSY,SPEEDOMETER (Ref # 21150) | 21150-1054 | 1 |
| BRACKET-METER (Ref # 25008) | 25008-1149 | 1 |
| GEAR-METER SCREW (Ref # 41060) | 41060-1117 | 1 |
| CABLE-SPEEDOMETER (Ref # 54001) | 54001-1139 | 1 |
| NUT,LOCK,5MM (Ref # 92015) | 92015-1221 | 2 |
| WASHER,5.5X20X1.2 (Ref # 92022) | 92022-1405 | 4 |
| RING-O,ID=13.8 (Ref # 92055) | 92055-1141 | 1 |
| BULB,12V 3.4W,T10 (Ref # 92069) | 92069-1007 | 1 |
| BAND,L=123 (Ref # 92072) | 92072-030 | 2 |
| DAMPER (Ref # 92075) | 92075-1409 | 2 |
| BUSHING-METER GEAR (Ref # 92087) | 92087-1054 | 1 |
| COLLAR,5.5X10X8.5 (Ref # 92143) | 92143-1235 | 2 |
| METER-ASSY,SPEED,MPH (Ref # 25001) | 25001-1723 | 1 |
| METER-ASSY,SPEED,KPH (Ref # 25001A) | 25001-1725 | 1 |
| KIT.,METER,MPH (Ref # 99995) | 99995-1003 | 1 |
| KIT.,METER,KPH (Ref # 99995A) | 99995-1004 | 1 |

© 2026 Kawasaki Motors Corp., U.S.A.