1999 Bayou 220

PARTS DIAGRAM

Rear Axle

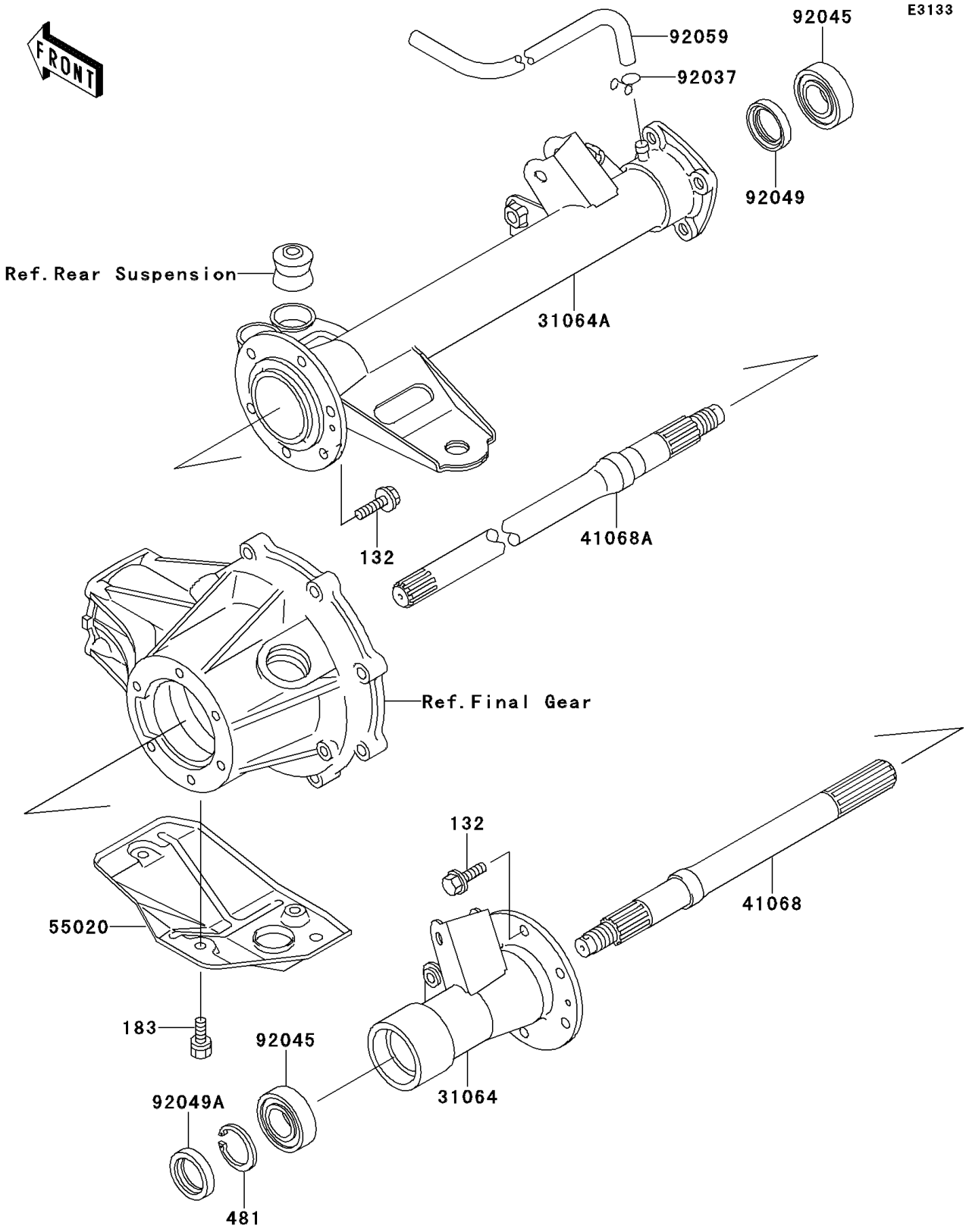

© 2026 Kawasaki Motors Corp., U.S.A.

1999 Bayou 220

PARTS LIST

Rear Axle

ITEM NAME	PART NUMBER	QUANTITY
BOLT-FLANGED-SMALL (Ref # 132)	132J0820	12
BOLT-UPSET-WS-SMALL (Ref # 183)	183H0814	3
CIRCLIP (Ref # 481)	481J5200	1
PIPE-COMP,LH (Ref # 31064)	31064-1088	1
PIPE-COMP,RH (Ref # 31064A)	31064-1089	1
AXLE,LH (Ref # 41068)	41068-1244	1
AXLE,RH (Ref # 41068A)	41068-1245	1
GUARD (Ref # 55020)	55020-1276	1
CLAMP,TUBE (Ref # 92037)	92037-147	1
BEARING-BALL,6205DDU (Ref # 92045)	92045-1229	2
SEAL-OIL,SO30428 (Ref # 92049)	92049-1236	1
SEAL-OIL (Ref # 92049A)	92049-1287	1
TUBE,4.7X9.5X1240 (Ref # 92059)	92059-1968	1

© 2026 Kawasaki Motors Corp., U.S.A.