1999 Bayou 220

PARTS DIAGRAM

Generator

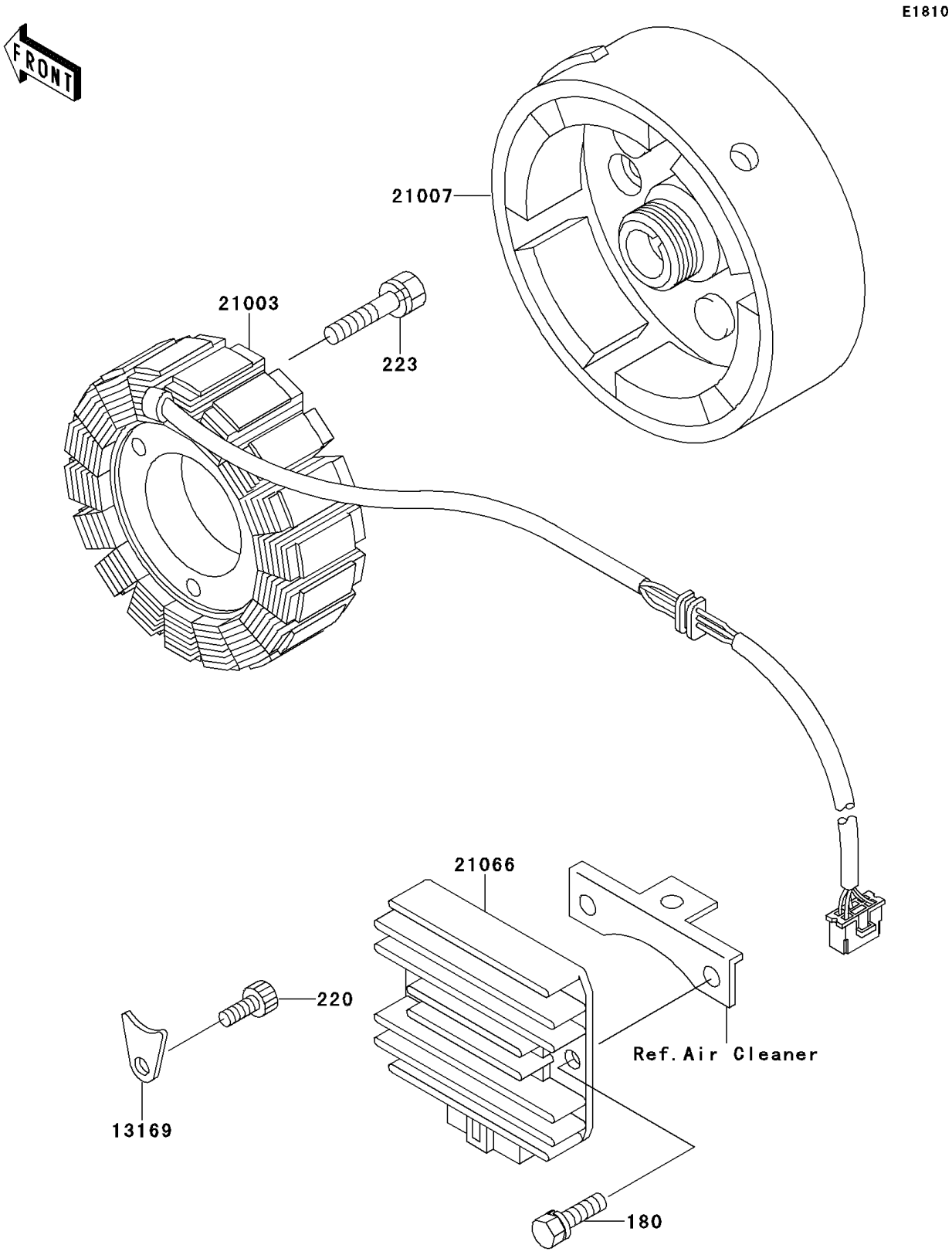

© 2026 Kawasaki Motors Corp., U.S.A.

1999 Bayou 220

PARTS LIST

Generator

ITEM NAME	PART NUMBER	QUANTITY
BOLT-UPSET-WS (Ref # 180)	180B0622	2
SCREW-PAN-CROS,6X10 (Ref # 220)	220B0610	1
SCREW-PAN-WS-CROS (Ref # 223)	223B0530	3
PLATE,HARNESS (Ref # 13169)	13169-1788	1
STATOR (Ref # 21003)	21003-1287	1
ROTOR,GENERATOR (Ref # 21007)	21007-1286	1
REGULATOR-VOLTAGE (Ref # 21066)	21066-1038	1

© 2026 Kawasaki Motors Corp., U.S.A.