1996 Bayou 220

PARTS DIAGRAM

Owner's Tools

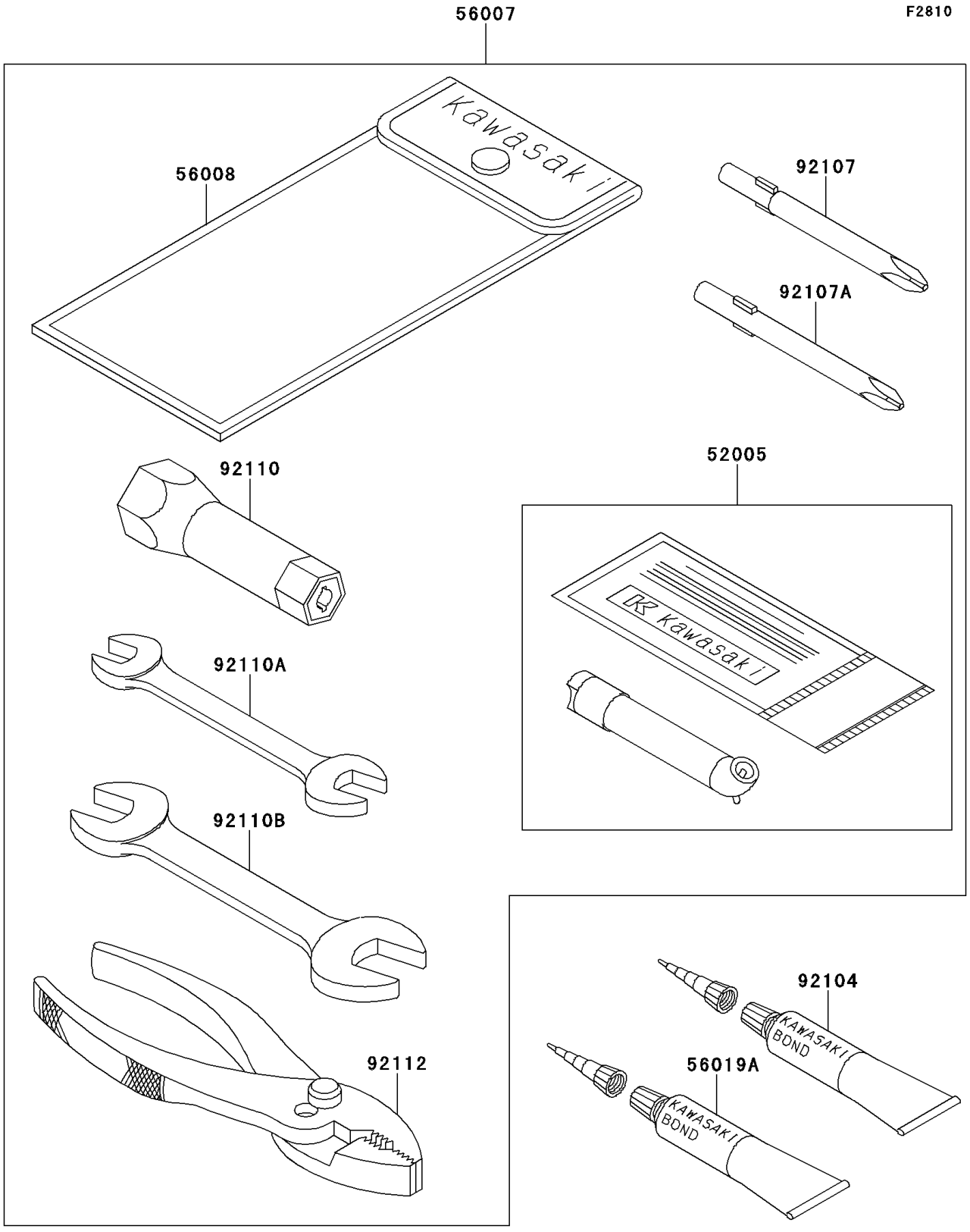

© 2026 Kawasaki Motors Corp., U.S.A.

1996 Bayou 220

PARTS LIST

Owner's Tools

ITEM NAME	PART NUMBER	QUANTITY
GAUGE,AIR (Ref # 52005)	52005-1082	1
TOOLKIT (Ref # 56007)	56007-1306	1
BAG,TOOL (Ref # 56008)	56008-1007	1
THREE BOND TB1211,HT/RS,WHITE (Ref # 56019A)	56019-120	1
GASKET-LIQUID,TUBE,100G,SILVER (Ref # 92104)	92104-002	1
TOOL-DRIVER,#3PHILLIPS (Ref # 92107)	92107-005	1
TOOL-DRIVER,#2PHILLIPS (Ref # 92107A)	92107-1053	1
TOOL-WRENCH,BOX,18MM (Ref # 92110)	92110-1111	1
TOOL-WRENCH,OPEN END,10X12 (Ref # 92110A)	92110-1152	1
TOOL-WRENCH,OPEN END,14X17 (Ref # 92110B)	92110-1153	1
TOOL-PLIERS (Ref # 92112)	92112-003	1

© 2026 Kawasaki Motors Corp., U.S.A.