# 1993 Bayou 220

## PARTS DIAGRAM

### Reflectors

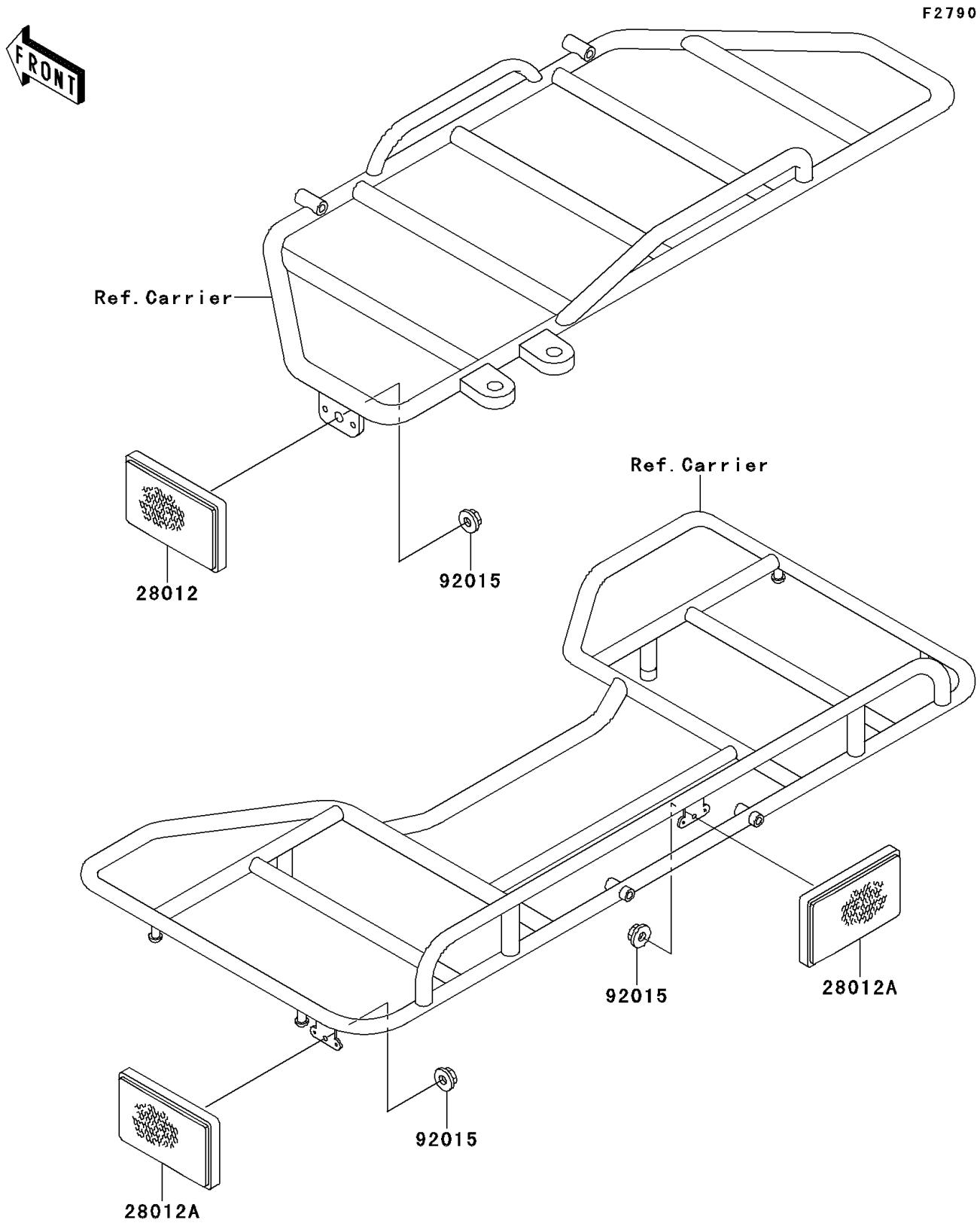


© 2026 Kawasaki Motors Corp., U.S.A.

# 1993 Bayou 220

## PARTS LIST

Reflectors

| ITEM NAME | PART NUMBER | QUANTITY |
|---|---|---|

© 2026 Kawasaki Motors Corp., U.S.A.