1993 Bayou 220

PARTS DIAGRAM

Carrier(s)

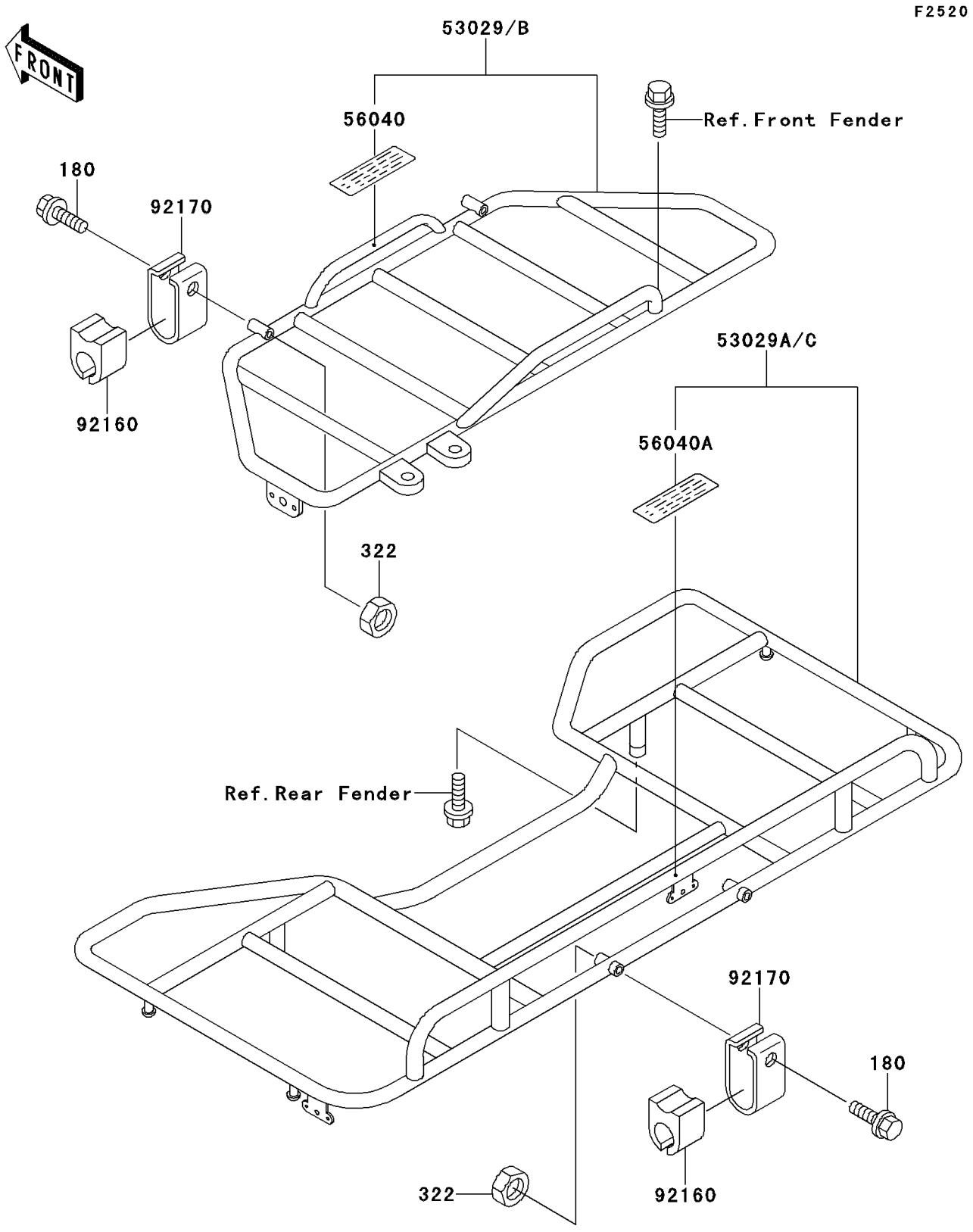

© 2026 Kawasaki Motors Corp., U.S.A.

1993 Bayou 220

PARTS LIST

Carrier(s)

ITEM NAME	PART NUMBER	QUANTITY

© 2026 Kawasaki Motors Corp., U.S.A.