1996 Bayou 220

PARTS DIAGRAM

Gear Change Drum/Shift Fork(s)

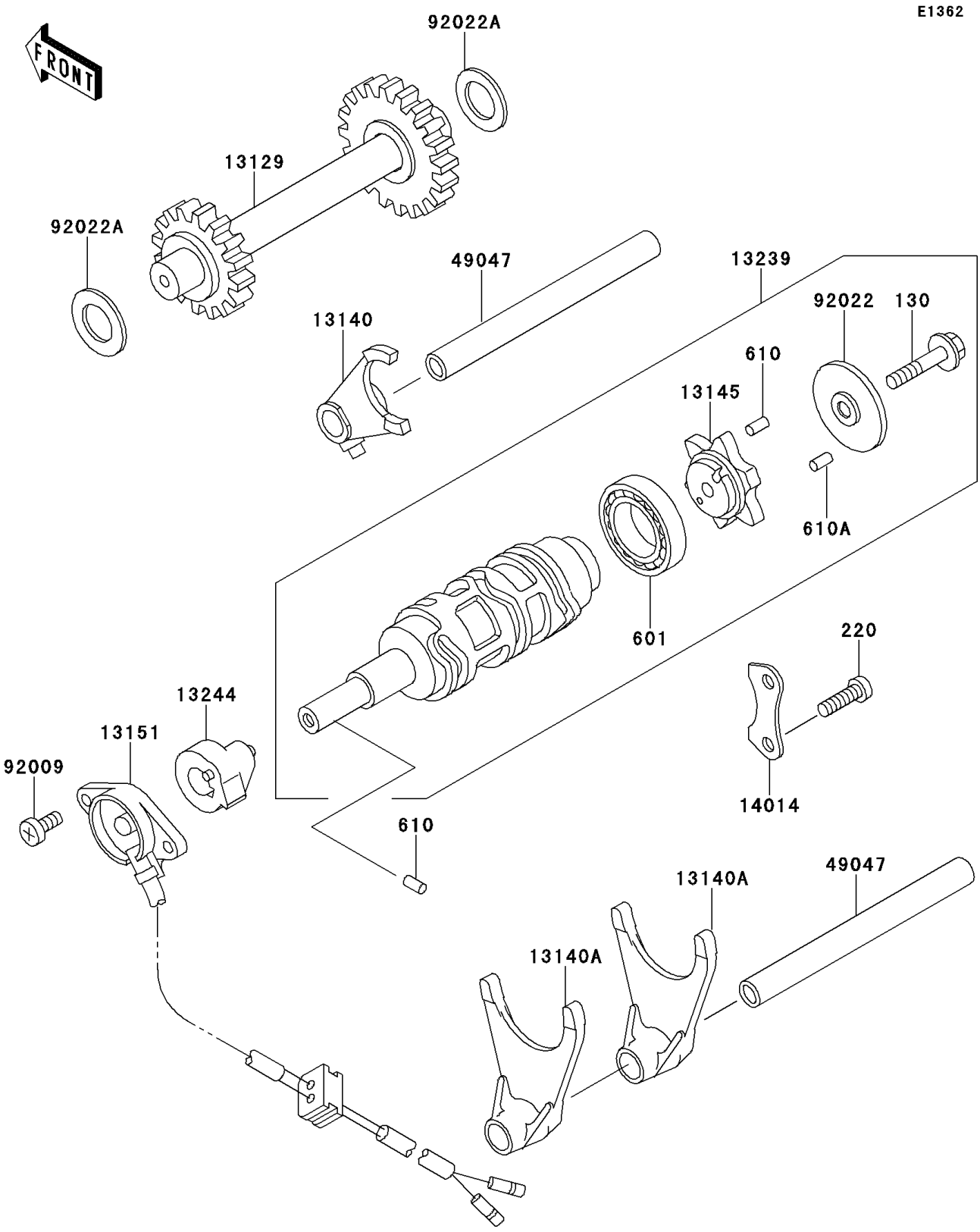

© 2026 Kawasaki Motors Corp., U.S.A.

1996 Bayou 220

PARTS LIST

Gear Change Drum/Shift Fork(s)

ITEM NAME	PART NUMBER	QUANTITY
BOLT-FLANGED,6X35 (Ref # 130)	130G0635	1
SCREW-PAN-CROS,6X14 (Ref # 220)	220B0614	2
BEARING-BALL (Ref # 601)	601A6005	1
ROLLER,4X6 (Ref # 610)	610A0406	2
ROLLER,4X12 (Ref # 610A)	610A0412	6
GEAR,REVERSE,22T&27T (Ref # 13129)	13129-1870	1
FORK-SHIFT (Ref # 13140)	13140-1161	1
FORK-SHIFT (Ref # 13140A)	13140-1162	2
CAM-CHANGE DRUM (Ref # 13145)	13145-1064	1
SWITCH-COMP,NEUTRAL (Ref # 13151)	13151-1067	1
DRUM-ASSY-CHANGE (Ref # 13239)	13239-1145	1
STOPPER-ASSY,REVERSE (Ref # 13244)	13244-1055	1
PLATE-POSITION (Ref # 14014)	14014-1087	1
ROD-SHIFT (Ref # 49047)	49047-1073	2
SCREW,5X14 (Ref # 92009)	92009-1341	2
WASHER,CHANGE DRUM (Ref # 92022)	92022-1886	1
WASHER,15.3X25X1 (Ref # 92022A)	92022-279	2

© 2026 Kawasaki Motors Corp., U.S.A.