1998 750 STX

PARTS DIAGRAM

Jet Pump

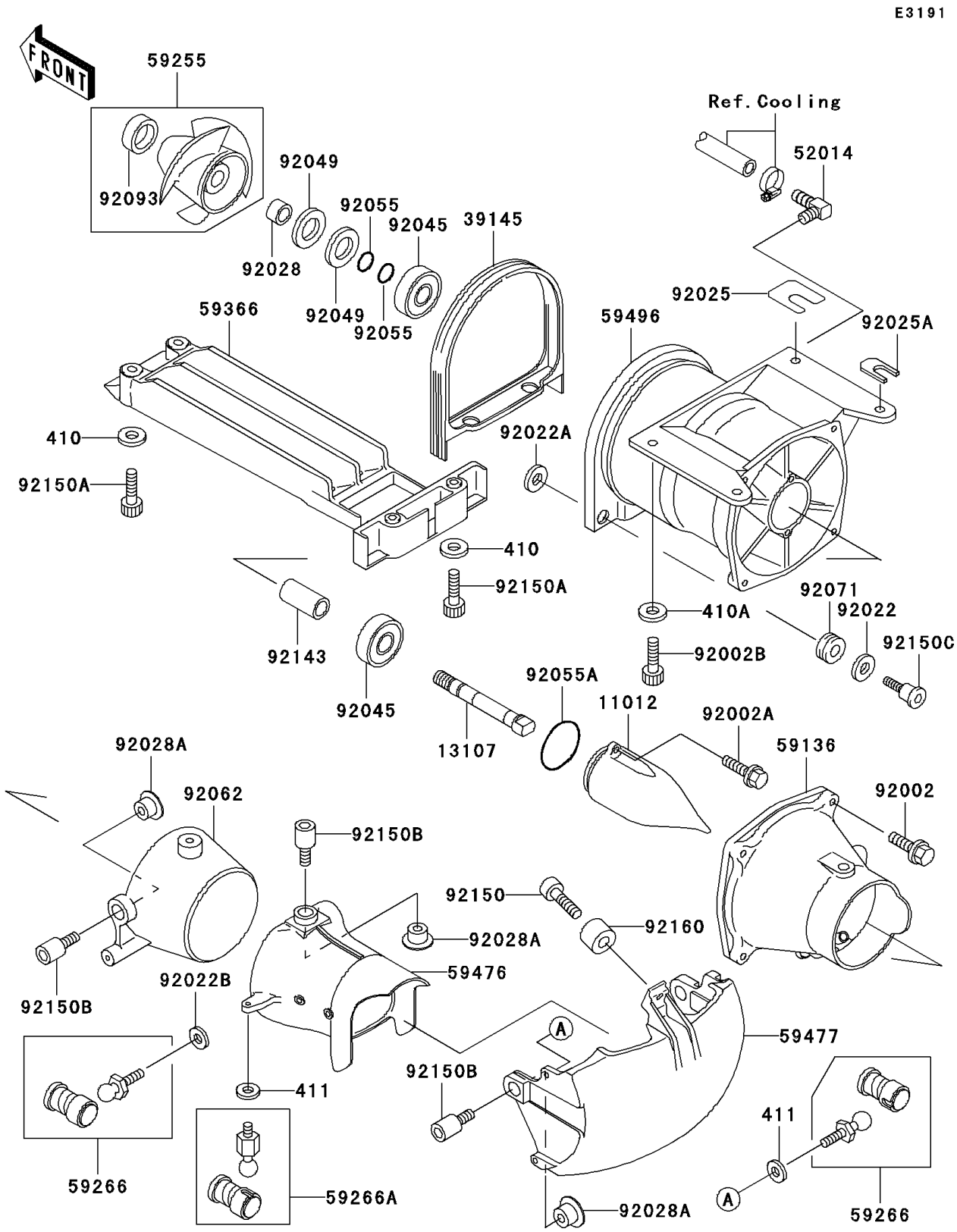

© 2026 Kawasaki Motors Corp., U.S.A.

1998 750 STX

PARTS LIST

Jet Pump

Kawasaki
Let the Good Times Roll®

ITEM NAME	PART NUMBER	QUANTITY
WASHER-PLAIN-SMALL,6MM (Ref # 410)	410S0600	4
WASHER-PLAIN-SMALL,8MM (Ref # 410A)	410S0800	4
WASHER-PLAIN,6MM (Ref # 411)	411S0600	2
CAP,JET PUMP (Ref # 11012)	11012-3712	1
SHAFT,JET PUMP (Ref # 13107)	13107-3721	1
TRIM-SEAL (Ref # 39145)	39145-3732	1
ELBOW (Ref # 52014)	52014-3708	1
NOZZLE-PUMP (Ref # 59136)	59136-3722	1
IMPELLER-COMP (Ref # 59255)	59255-3710	1
JOINT-BALL (Ref # 59266)	59266-3707	2
JOINT-BALL (Ref # 59266A)	59266-3709	1
GRATE (Ref # 59366)	59366-3710	1
NOZZLE-STRG (Ref # 59476)	59476-3731	1
BUCKET-REVERSE (Ref # 59477)	59477-3708	1
VANE-GUIDE (Ref # 59496)	59496-3727	1
BOLT,6X30 (Ref # 92002)	92002-3726	4
BOLT,6X16 (Ref # 92002A)	92002-3728	2
BOLT,SOCKET,8X20 (Ref # 92002B)	92002-3771	4
WASHER,6.2X20X2 (Ref # 92022)	92022-3714	2
WASHER,10.2X20X1.5 (Ref # 92022A)	92022-3742	2
WASHER (Ref # 92022B)	92022-567	1
SHIM,T=0.5MM (Ref # 92025)	92025-3702	2
SHIM,T=1.5MM (Ref # 92025A)	92025-3708	2
BUSHING,17X25X15 (Ref # 92028)	92028-3717	1
BUSHING (Ref # 92028A)	92028-3740	6
BEARING-BALL,#63032RD (Ref # 92045)	92045-3706	2
SEAL-OIL,TBY25X47X6 (Ref # 92049)	92049-3714	2
RING-O,13X1.9 (Ref # 92055)	92055-1021	2
RING-O (Ref # 92055A)	92055-3706	1

© 2026 Kawasaki Motors Corp., U.S.A.

1998 750 STX

PARTS LIST

Jet Pump

ITEM NAME	PART NUMBER	QUANTITY
NOZZLE (Ref # 92062)	92062-3719	1
GROMMET (Ref # 92071)	92071-3716	2
SEAL,JET PUMP (Ref # 92093)	92093-3739	1
COLLAR,17.4X25.4X53 (Ref # 92143)	92143-3708	1
BOLT,SOCKET,6X10 (Ref # 92150)	92150-3759	1
BOLT,SOCKET,6X18 (Ref # 92150A)	92150-3775	4
BOLT (Ref # 92150B)	92150-3808	6
BOLT (Ref # 92150C)	92150-3850	2
DAMPER (Ref # 92160)	92160-3738	1

© 2026 Kawasaki Motors Corp., U.S.A.