2015 W800 (European)

PARTS DIAGRAM

Ignition Switch

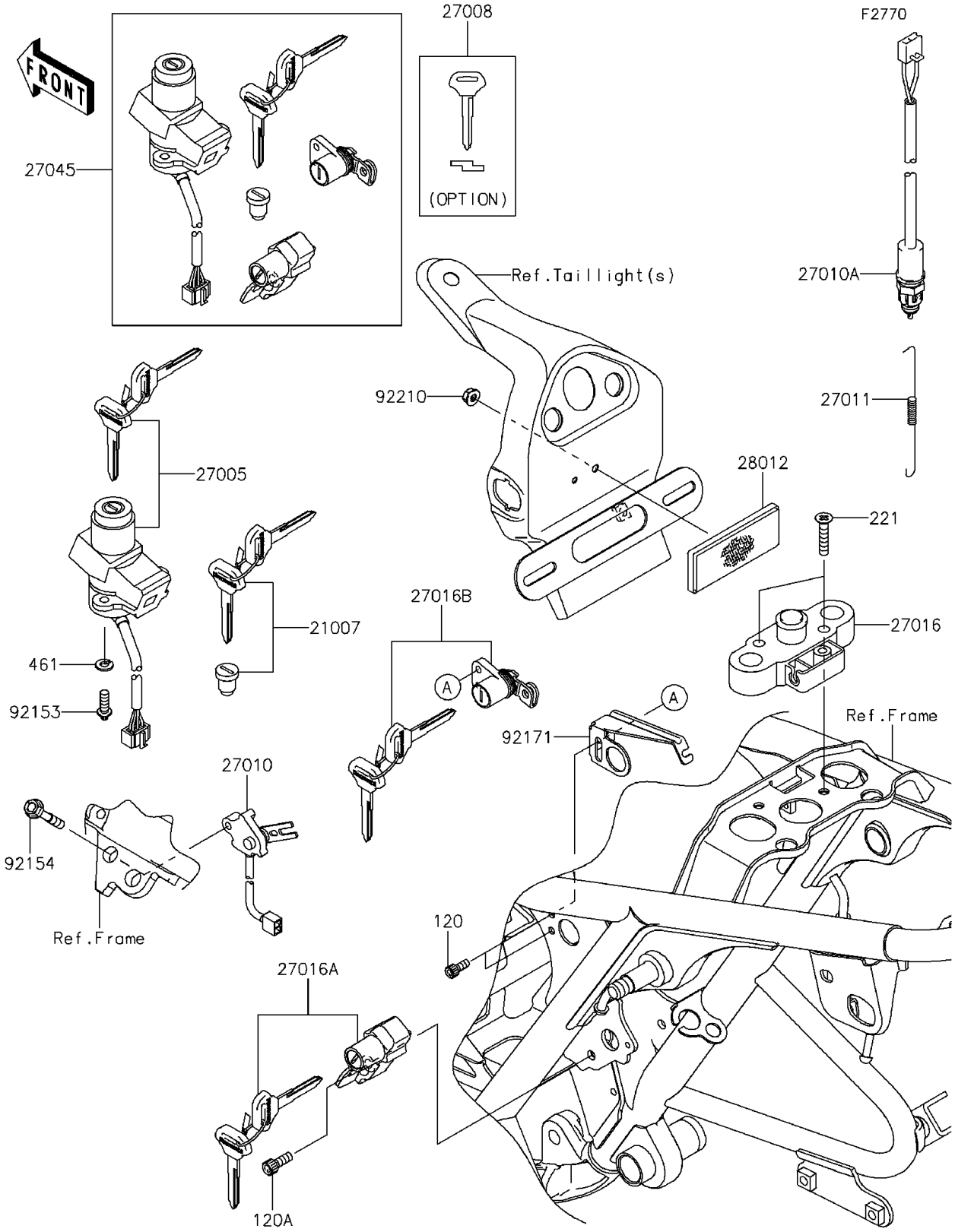

© 2026 Kawasaki Motors Corp., U.S.A.

2015 W800 (European)

PARTS LIST

Ignition Switch

ITEM NAME	PART NUMBER	QUANTITY
BOLT-SOCKET,5X12 (Ref # 120)	120CB0512	2
BOLT-SOCKET,6X16 (Ref # 120A)	120CB0616	1
SCREW-CSK-CROS,6X30 (Ref # 221)	221AB0630	2
WASHER-SPRING,6MM (Ref # 461)	461DA0600	2
ROTOR,LOCK,TANK CAP (Ref # 21007)	21007-5043	1
SWITCH-ASSY-IGNITION (Ref # 27005)	27005-5142	1
KEY-LOCK,BLANK (Ref # 27008)	27008-1189	1
SWITCH,SIDE STAND (Ref # 27010)	27010-1468	1
SWITCH,REAR BRAKE (Ref # 27010A)	27010-1486	1
SPRING,BRAKE LAMP SWITCH (Ref # 27011)	27011-011	1
LOCK-ASSY,SEAT STRIKER (Ref # 27016)	27016-1098	1
LOCK-ASSY,HELMET (Ref # 27016A)	27016-5249	1
LOCK-ASSY,SEAT (Ref # 27016B)	27016-5256	1
SWITCH-ASSY (Ref # 27045)	27045-5453	1
REFLECTOR-REFLEX (Ref # 28012)	28012-1077	1
BOLT,TORX,6X16 (Ref # 92153)	92153-0967	2
BOLT,FLANGED,6X40 (Ref # 92154)	92154-0859	1
CLAMP (Ref # 92171)	92171-1072	1
NUT,FLANGED,5MM (Ref # 92210)	92210-0007	1

© 2026 Kawasaki Motors Corp., U.S.A.