2016 W800 (European)

PARTS DIAGRAM

Turn Signals

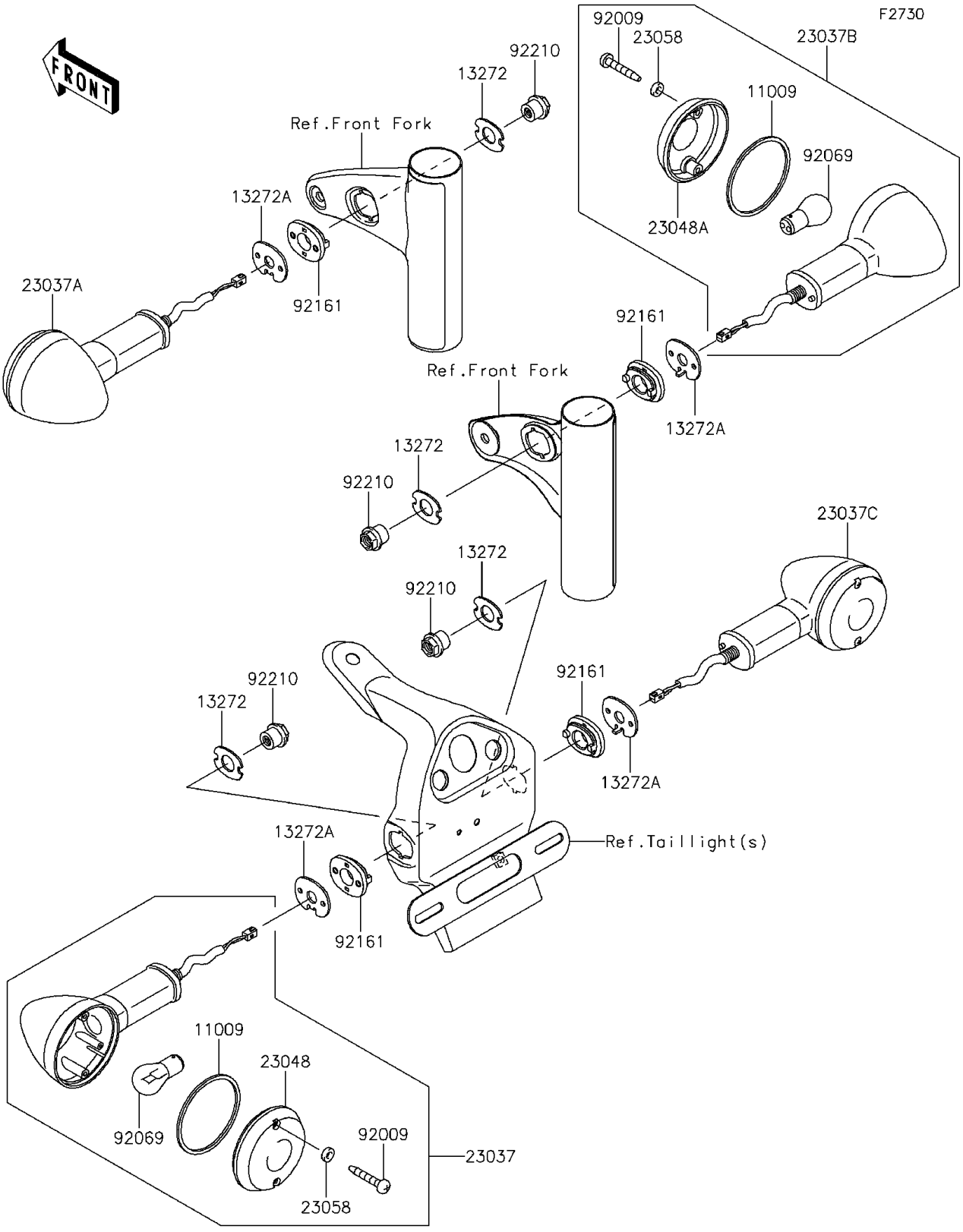

© 2026 Kawasaki Motors Corp., U.S.A.

2016 W800 (European)

PARTS LIST

Turn Signals

ITEM NAME	PART NUMBER	QUANTITY
GASKET,SIGNAL LAMP (Ref # 11009)	11009-1413	4
PLATE,SIGNAL LAMP (Ref # 13272)	13272-0968	4
PLATE,POSITIONING (Ref # 13272A)	13272-1314	4
LAMP-ASSY-SIGNAL,RR,LH (Ref # 23037)	23037-0189	1
LAMP-ASSY-SIGNAL,FR,LH (Ref # 23037A)	23037-0196	1
LAMP-ASSY-SIGNAL,FR,RH (Ref # 23037B)	23037-0197	1
LAMP-ASSY-SIGNAL,RR,RH (Ref # 23037C)	23037-0199	1
LENS-SIGNAL LAMP (Ref # 23048)	23048-1065	2
LENS-SIGNAL LAMP (Ref # 23048A)	23048-1066	2
WASHER,PLAIN,4MM (Ref # 23058)	23058-002	8
SCREW,TAPPING,4X25 (Ref # 92009)	92009-1637	8
BULB,12V 21W (Ref # 92069)		4
DAMPER,SIGNAL LAMP (Ref # 92161)	92161-1461	4
NUT (Ref # 92210)	92210-0632	4

© 2026 Kawasaki Motors Corp., U.S.A.