2016 W800 (European)

PARTS DIAGRAM

Crankshaft

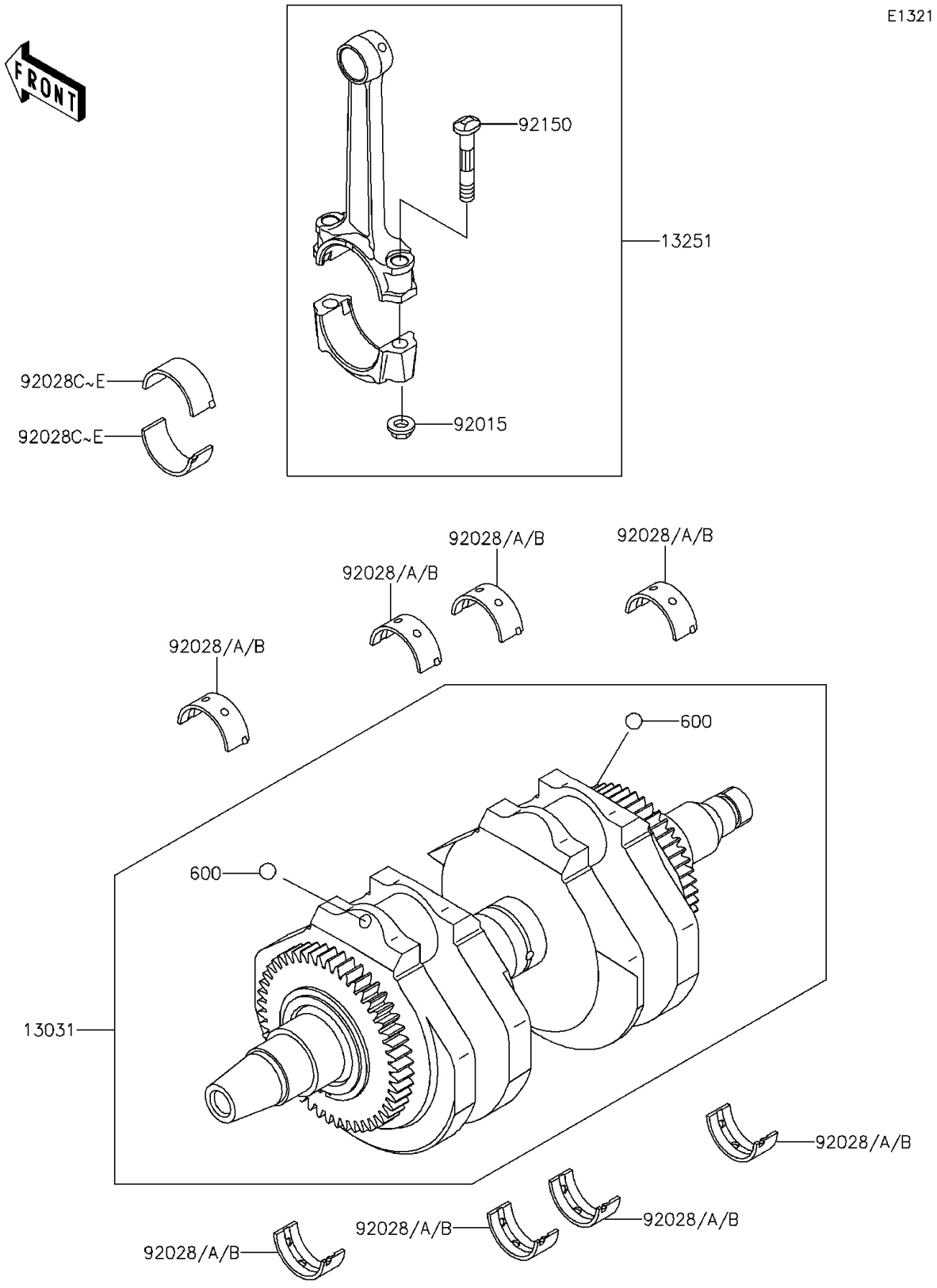

© 2026 Kawasaki Motors Corp., U.S.A.

2016 W800 (European)

PARTS LIST

Crankshaft

ITEM NAME	PART NUMBER	QUANTITY
BALL-STEEL,9/32 (Ref # 600)	600A0900	2
CRANKSHAFT-COMP (Ref # 13031)	13031-0151	1
ROD-ASSY-CONNECTING,J (Ref # 13251)	13251-1123-JJ	2
NUT,FLANGED,8MM (Ref # 92015)	92015-1311	4
BUSHING,CRANKSHAFT,BLUE (Ref # 92028)	92028-1903	8
BUSHING,CRANKSHAFT,BLACK (Ref # 92028A)	92028-1904	AR
BUSHING,CRANKSHAFT,BROWN (Ref # 92028B)	92028-1905	AR
BUSHING,CONNECTING ROD,BLUE (Ref # 92028C)	92028-1906	4
BUSHING,CONNECTING ROD,BLACK (Ref # 92028D)	92028-1907	AR
BUSHING,CONNECTING ROD,BROWN (Ref # 92028E)	92028-1908	AR
BOLT,CONNECTING ROD,8MM (Ref # 92150)	92150-1216	4

© 2026 Kawasaki Motors Corp., U.S.A.