2012 ER-6n (European)

PARTS DIAGRAM

Cylinder Head

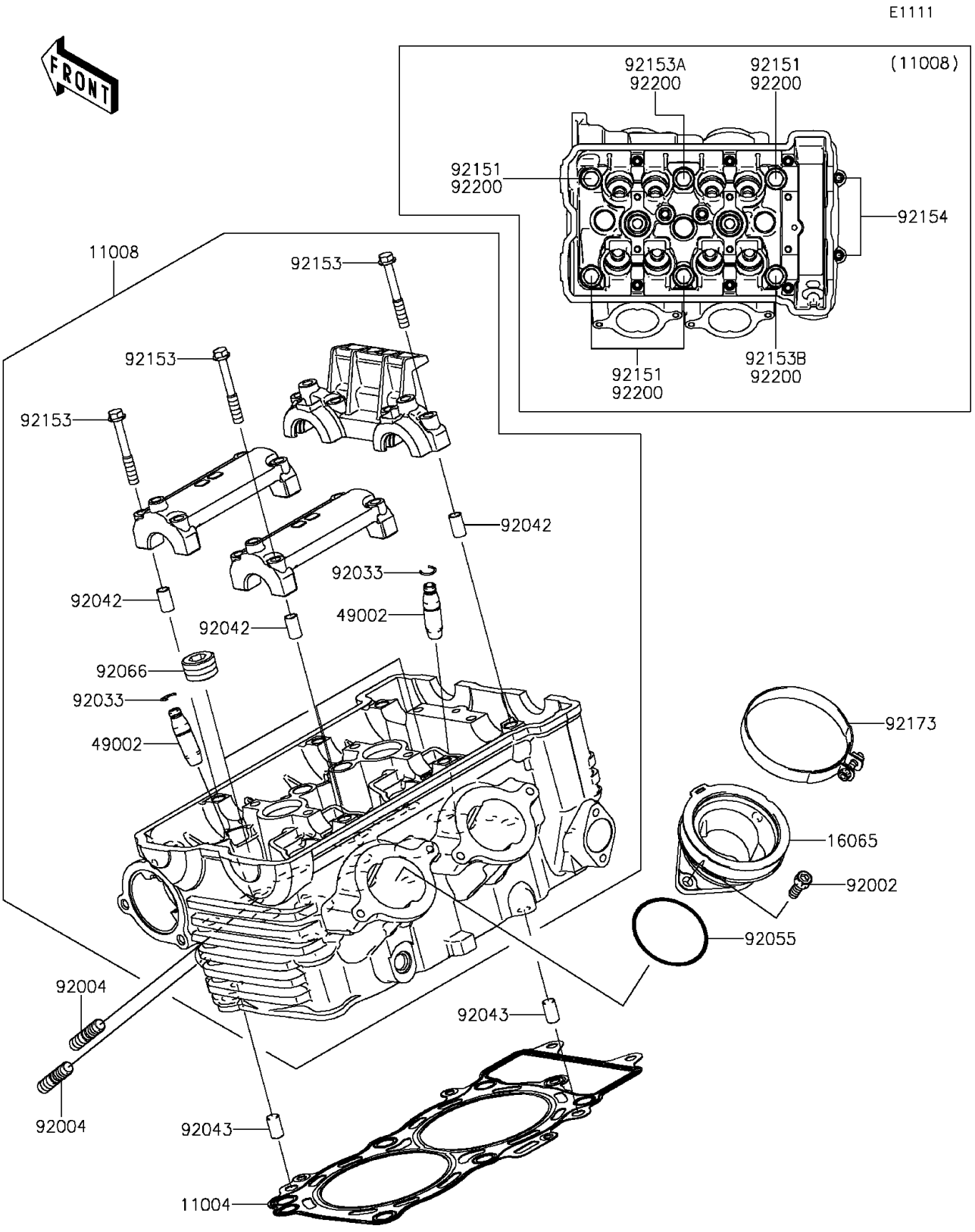

© 2026 Kawasaki Motors Corp., U.S.A.

2012 ER-6n (European)

PARTS LIST

Cylinder Head

ITEM NAME	PART NUMBER	QUANTITY
GASKET-HEAD (Ref # 11004)	11004-0064	1
HEAD-COMP-CYLINDER (Ref # 11008)	11008-0763	1
HOLDER,THROTTLE BODY (Ref # 16065)	16065-0024	2
GUIDE-VALVE (Ref # 49002)	49002-1116	8
BOLT,6X16 (Ref # 92002)	92002-1143	4
STUD,8X22 (Ref # 92004)	92004-0025	4
RING-SNAP (Ref # 92033)	92033-1247	8
PIN,DOWEL,6.3X8X14 (Ref # 92042)	92042-007	6
PIN,8X14 (Ref # 92043)	92043-1567	2
RING-O,47X1.9 (Ref # 92055)	92055-1600	2
PLUG,PT1/2X12.5 (Ref # 92066)	92066-0002	3
BOLT,10X158 (Ref # 92151)	92151-1152	4
BOLT,6X45 (Ref # 92153)	92153-0339	12
BOLT,FLANGED-SMALL,10X176 (Ref # 92153A)	92153-0972	1
BOLT,FLANGED-SMALL,10X80 (Ref # 92153B)	92153-1321	1
BOLT,SOCKET,6X30 (Ref # 92154)	92154-0116	2
CLAMP (Ref # 92173)	92173-0239	2
WASHER,10.5X19X2.3 (Ref # 92200)	92200-0363	6

© 2026 Kawasaki Motors Corp., U.S.A.