2012 JET SKI® Ultra® 300X

PARTS DIAGRAM

Seat

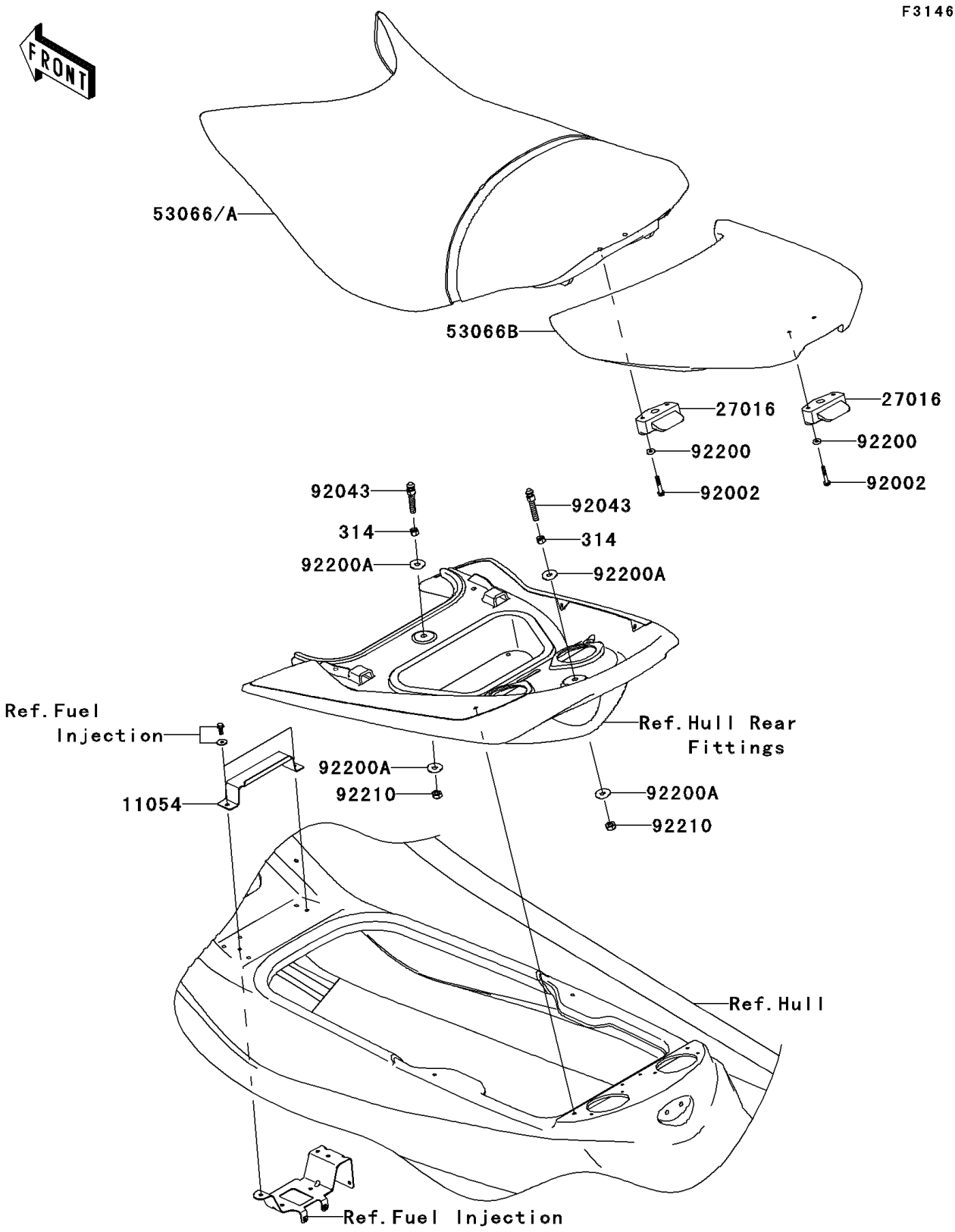

© 2026 Kawasaki Motors Corp., U.S.A.

2012 JET SKI® Ultra® 300X

PARTS LIST

Seat

ITEM NAME	PART NUMBER	QUANTITY
NUT-HEX-FINE,10MM (Ref # 314)	314R1000	2
BRACKET,FRONT SEAT (Ref # 11054)	11054-3702	1
LOCK-ASSY,SEAT,FR&RR (Ref # 27016)	27016-3758	2
SEAT-ASSY,LEATHER BLK+BAND BLK (Ref # 53066)	53066-3726-12Y	1
SEAT-ASSY,P.SILVER (Ref # 53066B)	53066-3734-12N	1
BOLT,6X40 (Ref # 92002)	92002-3716	4
PIN (Ref # 92043)	92043-3763	2
WASHER,6.5X16X2.0 (Ref # 92200)	92200-1543	4
WASHER (Ref # 92200A)	92200-3762	4
NUT,LOCK,10MM (Ref # 92210)	92210-3792	2

© 2026 Kawasaki Motors Corp., U.S.A.