2012 JET SKI® Ultra® 300X

PARTS DIAGRAM

Ignition System

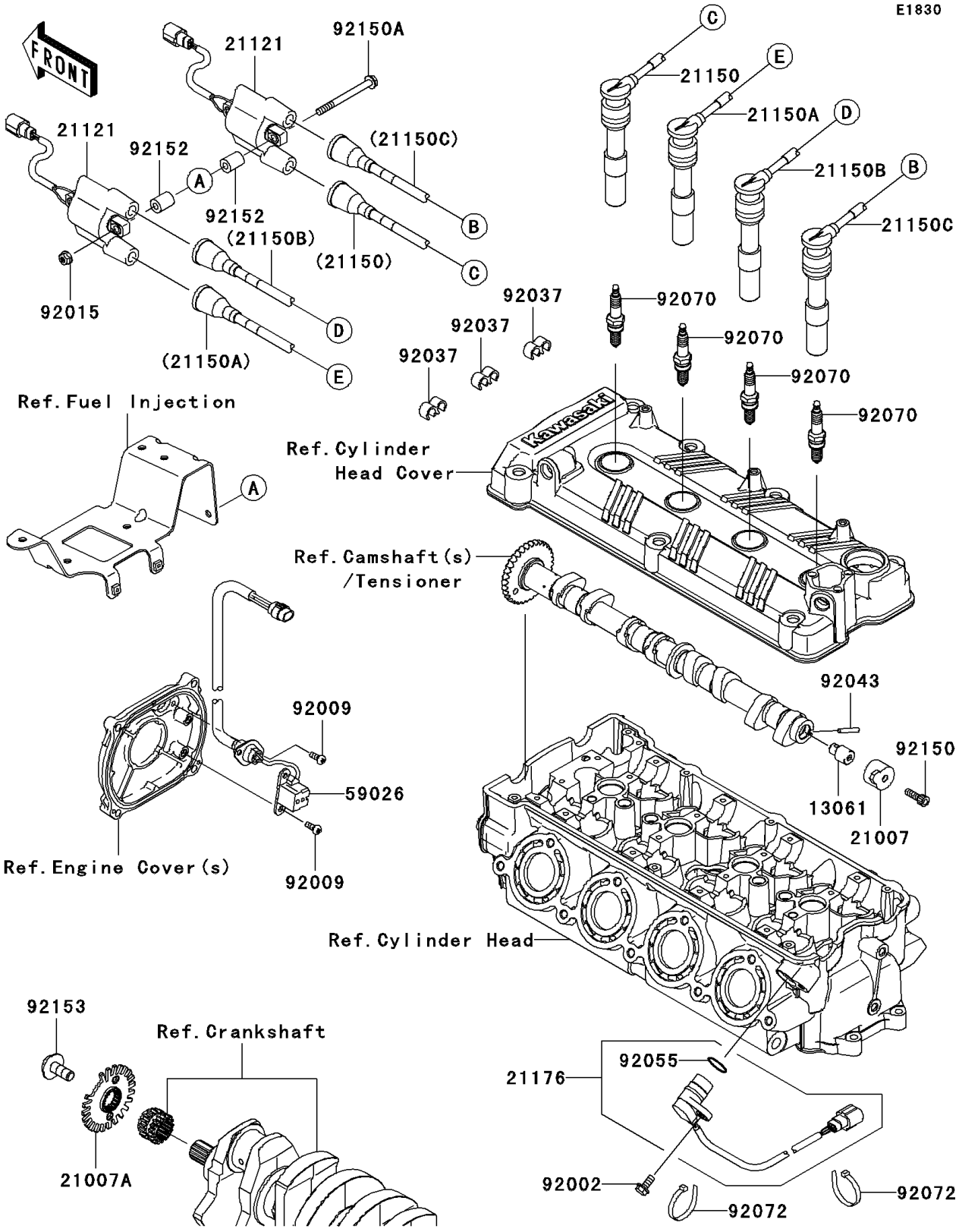

© 2026 Kawasaki Motors Corp., U.S.A.

2012 JET SKI® Ultra® 300X

PARTS LIST

Ignition System

ITEM NAME	PART NUMBER	QUANTITY
BOSS,CAM SENSOR (Ref # 13061)	13061-1687	1
ROTOR,EX CAM (Ref # 21007)	21007-3742	1
ROTOR,EX CAM (Ref # 21007A)	21007-3747	1
COIL-IGNITION (Ref # 21121)	21121-3722	2
CORD-ASSY,#1,L=340 (Ref # 21150)	21150-3731	1
CORD-ASSY,#2,L=450 (Ref # 21150A)	21150-3732	1
CORD-ASSY,#3,L=540 (Ref # 21150B)	21150-3733	1
CORD-ASSY,#4,L=600 (Ref # 21150C)	21150-3734	1
SENSOR,CAM ANGLE (Ref # 21176)	21176-1077	1
COIL-PULSING (Ref # 59026)	59026-3702	1
BOLT,6X16 (Ref # 92002)	92002-3728	1
SCREW,5X12 (Ref # 92009)	92009-1296	4
NUT,6MM (Ref # 92015)	92015-3767	2
CLAMP,CORD (Ref # 92037)	92037-1603	3
PIN (Ref # 92043)	92043-1575	1
RING-O (Ref # 92055)	92055-1639	1
PLUG-SPARK,PMR9B(NGK) (Ref # 92070)	92070-3707	4
BAND,L=188.85 (Ref # 92072)	92072-0105	2
BOLT,6X18 (Ref # 92150)	92150-1645	1
BOLT,6X70 (Ref # 92150A)	92150-3753	2
COLLAR (Ref # 92152)	92152-3738	4
BOLT,FLANGED,8X23 (Ref # 92153)	92153-0549	1

© 2026 Kawasaki Motors Corp., U.S.A.