1997 KLR650

PARTS DIAGRAM

Camshaft(s)/Tensioner

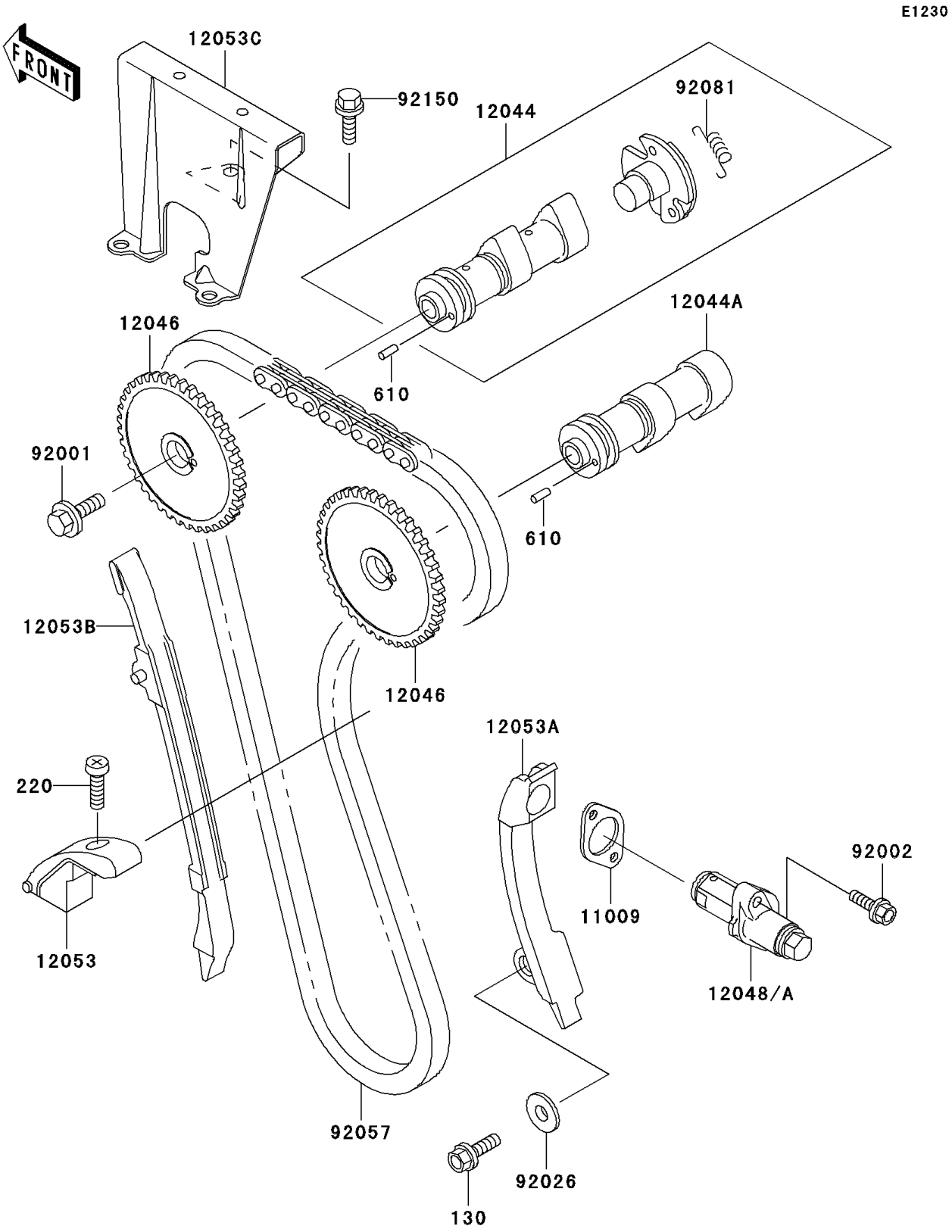

© 2026 Kawasaki Motors Corp., U.S.A.

1997 KLR650

PARTS LIST

Camshaft(s)/Tensioner

ITEM NAME	PART NUMBER	QUANTITY
BOLT-FLANGED,8X25 (Ref # 130)	130G0825	1
SCREW-PAN-CROS,6X14 (Ref # 220)	220B0614	1
ROLLER,4X10 (Ref # 610)	610A0410	2
GASKET,TENSIONER (Ref # 11009)	11009-1858	1
CAMSHAFT-VALVE,EXHAUST (Ref # 12044)	12044-1370	1
CAMSHAFT-VALVE,INTAKE (Ref # 12044A)	12044-1372	1
SPROCKET,48T (Ref # 12046)	12046-1160	2
TENSIONER-ASSY (Ref # 12048A)	12048-1094	1
GUIDE-CHAIN,LWR (Ref # 12053)	12053-1134	1
GUIDE-CHAIN,RR (Ref # 12053A)	12053-1222	1
GUIDE-CHAIN,FR (Ref # 12053B)	12053-1223	1
GUIDE-CHAIN,UPP (Ref # 12053C)	12053-1353	1
BOLT,10X23 (Ref # 92001)	92001-1859	2
BOLT,6X25 (Ref # 92002)	92002-1086	2
SPACER (Ref # 92026)	92026-1146	1
CHAIN,CAM,92RH2015 (Ref # 92057)	92057-1402	1
SPRING,DECOMPRESSOR (Ref # 92081)	92081-1626	1
BOLT,6X12 (Ref # 92150)	92150-1868	1

© 2026 Kawasaki Motors Corp., U.S.A.