2010 Vulcan® 1700 Voyager®

PARTS DIAGRAM

Decals(Blue/Gray)(AAF)

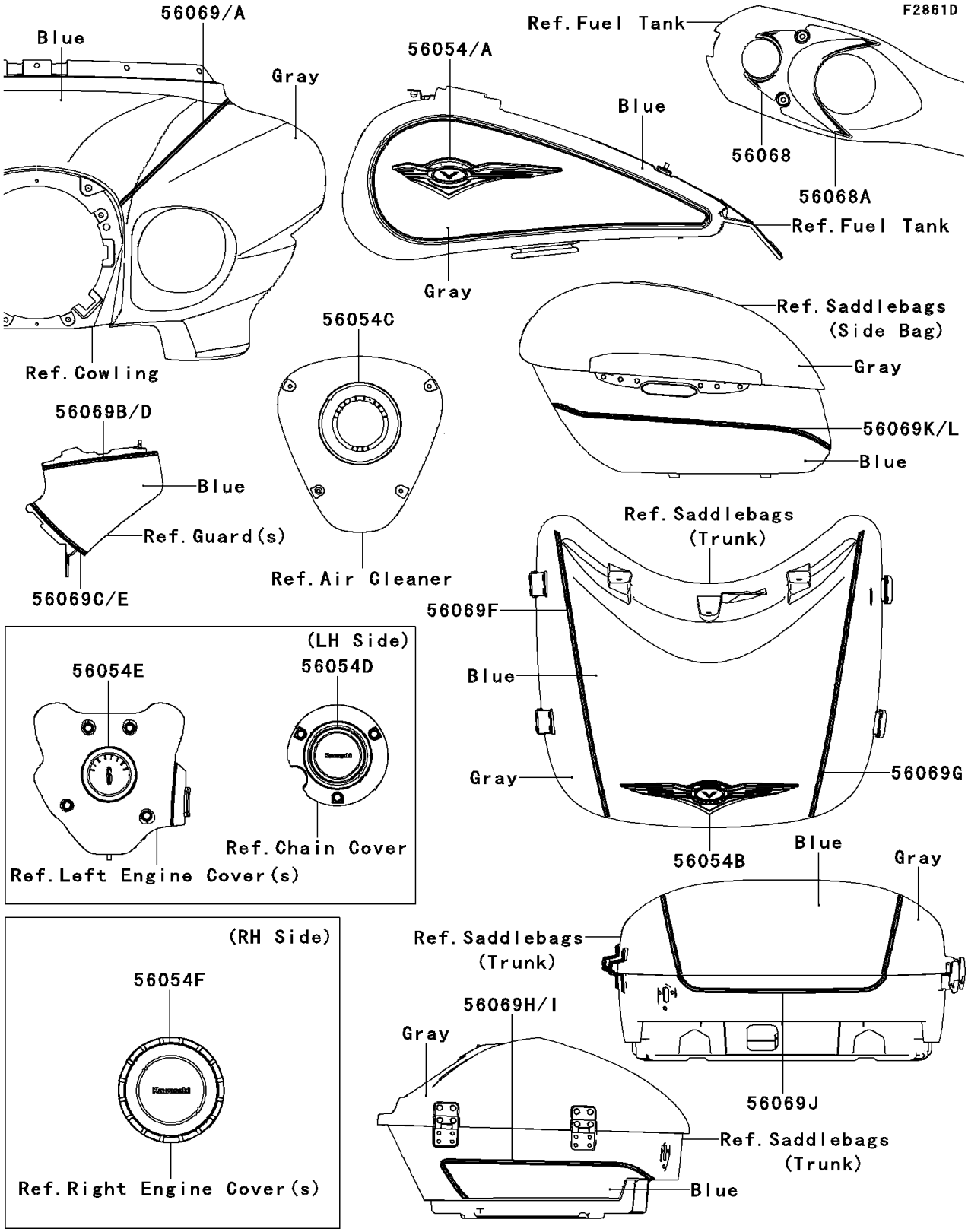

© 2026 Kawasaki Motors Corp., U.S.A.

2010 Vulcan® 1700 Voyager®

PARTS LIST

Decals(Blue/Gray)(AAF)

ITEM NAME	PART NUMBER	QUANTITY
MARK,FUEL TANK,LH (Ref # 56054)	56054-0300	1
MARK,FUEL TANK,RH (Ref # 56054A)	56054-0301	1
MARK,REAR TRUNK (Ref # 56054B)	56054-0302	1
MARK,AIR CLEANER COVER (Ref # 56054C)	56054-0303	2
MARK,PULLEY COVER (Ref # 56054D)	56054-0304	1
MARK,GENERATOR COVER (Ref # 56054E)	56054-0305	1
MARK,CLUTCH COVER (Ref # 56054F)	56054-0463	1
PATTERN,TANK COVER,UPP (Ref # 56068)	56068-1881	1
PATTERN,TANK COVER,LWR (Ref # 56068A)	56068-1882	1
PATTERN,FR COWLING,LH (Ref # 56069)	56069-0403	1
PATTERN,FR COWLING,RH (Ref # 56069A)	56069-0404	1
PATTERN,LEG SHIELD,UPP,LH (Ref # 56069B)	56069-0405	1
PATTERN,LEG SHIELD,LWR,LH (Ref # 56069C)	56069-0406	1
PATTERN,LEG SHIELD,UPP,RH (Ref # 56069D)	56069-0407	1
PATTERN,LEG SHIELD,LWR,RH (Ref # 56069E)	56069-0408	1
PATTERN,REAR TRUNK,UPP,LH (Ref # 56069F)	56069-0409	1
PATTERN,REAR TRUNK,UPP,RH (Ref # 56069G)	56069-0410	1
PATTERN,REAR TRUNK,LWR,LH (Ref # 56069H)	56069-0411	1
PATTERN,REAR TRUNK,LWR,RH (Ref # 56069I)	56069-0412	1
PATTERN,REAR TRUNK,LWR,CNT (Ref # 56069J)	56069-0413	1
PATTERN,SIDE BAG,LH (Ref # 56069K)	56069-0414	1
PATTERN,SIDE BAG,RH (Ref # 56069L)	56069-0415	1

© 2026 Kawasaki Motors Corp., U.S.A.