1982 Spectre

PARTS DIAGRAM

SWING ARM/SHOCK ABSORBERS

F2140-0090

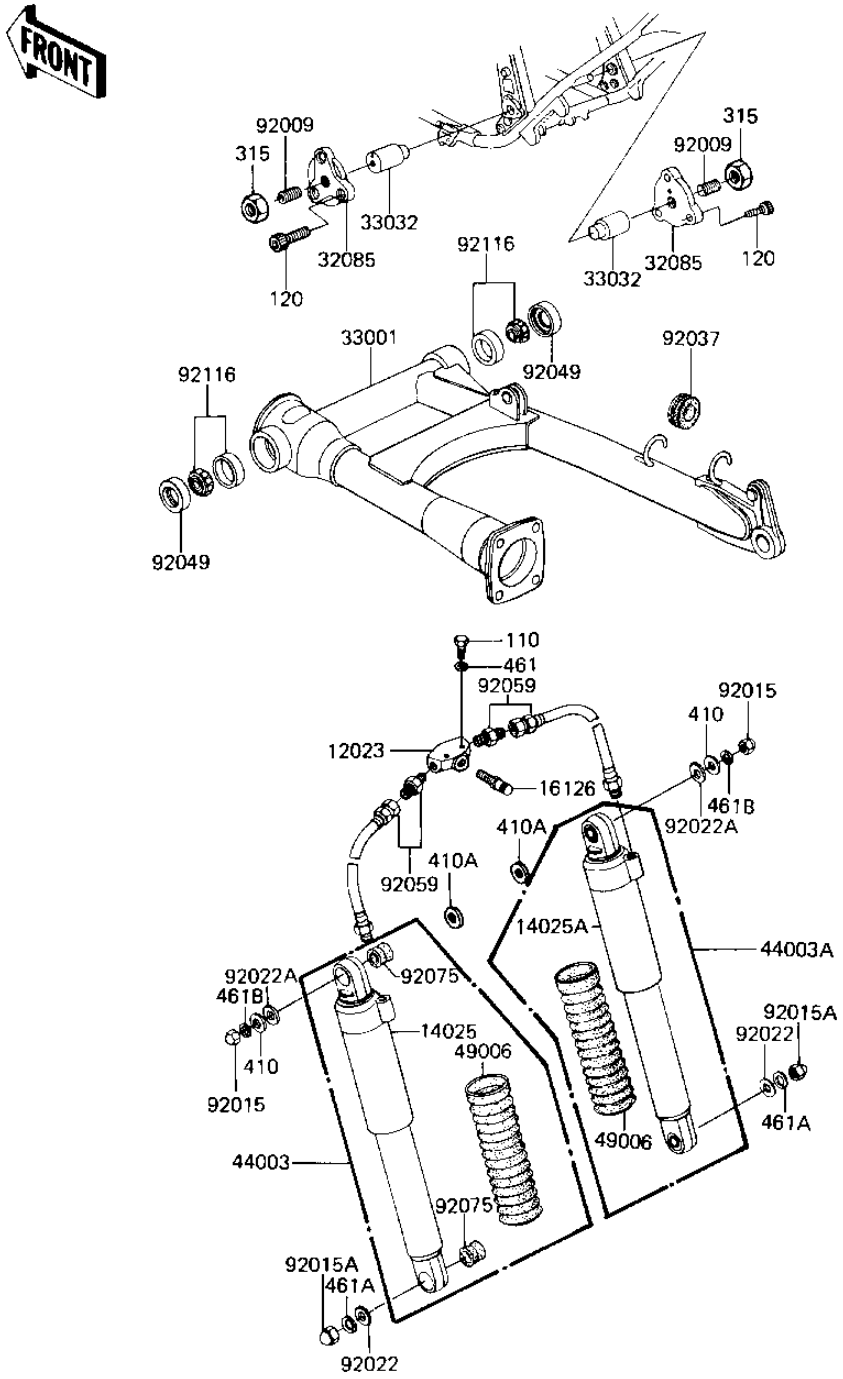

© 2026 Kawasaki Motors Corp., U.S.A.

1982 Spectre

PARTS LIST

SWING ARM/SHOCK ABSORBERS

ITEM NAME	PART NUMBER	QUANTITY

© 2026 Kawasaki Motors Corp., U.S.A.