1982 Spectre

PARTS DIAGRAM

BATTERY CASE/TOOL CASE

F2132-0054

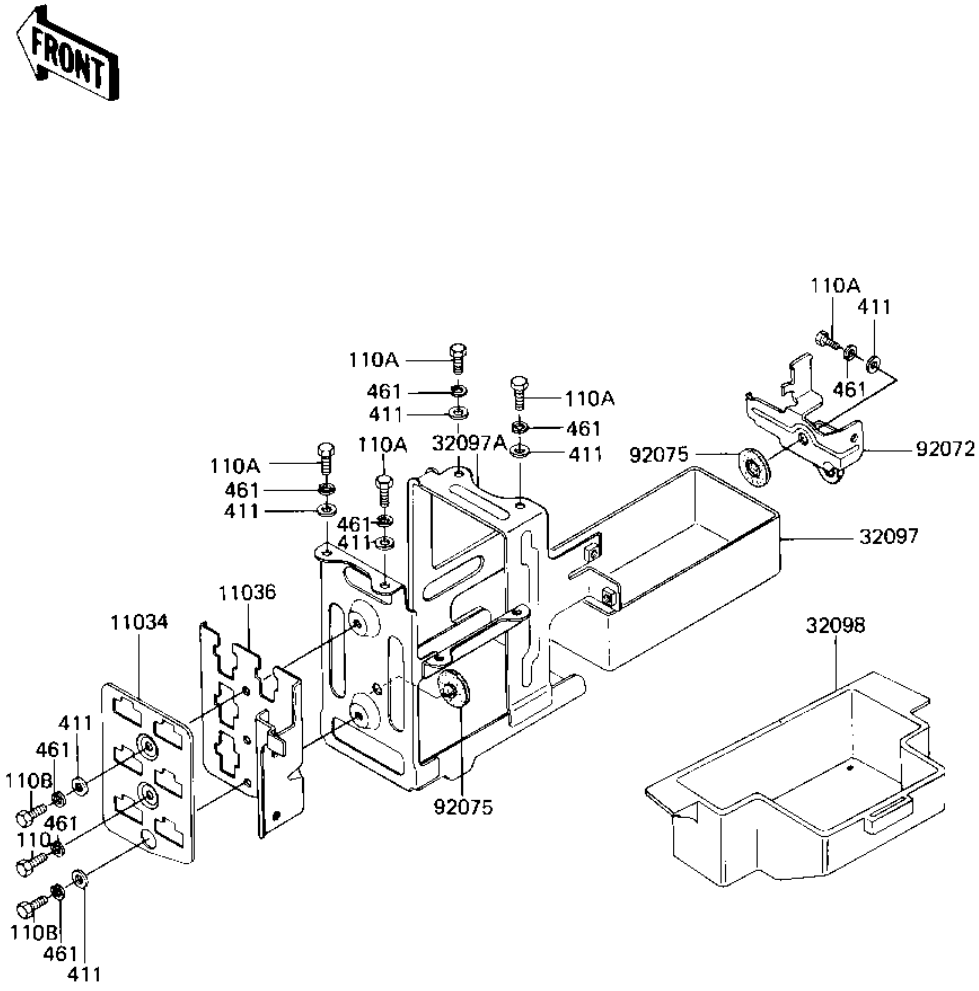

© 2026 Kawasaki Motors Corp., U.S.A.

1982 Spectre

PARTS LIST

BATTERY CASE/TOOL CASE

ITEM NAME	PART NUMBER	QUANTITY

© 2026 Kawasaki Motors Corp., U.S.A.